AQ Inductive Components

AQ Group

A global presence offer unique benefits to customers around the world.

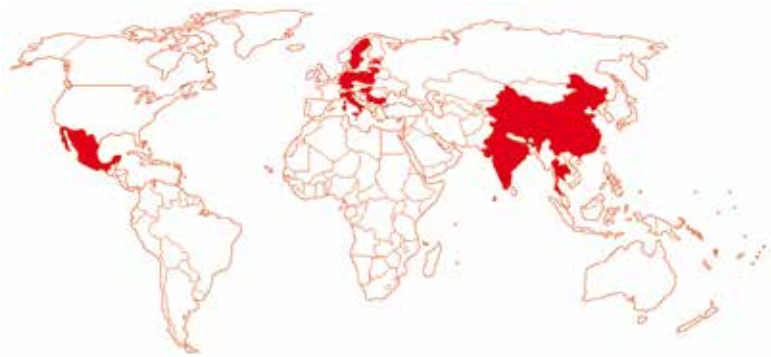

Bulgaria China Estonia Germany Hungary India Italy Lithuania Mexico Poland Serbia Sweden Thailand

AQ Group is a leading supplier to demanding industrial customers and is listed on Nasdaq Stockholm's main market.

The Group consists mainly of operating companies each of which develop their special skills and in cooperation with other companies, striving to provide cost effective solutions in close cooperation with the customer.
The Group headquarter is in Västerås, Sweden. AQ has, on December 31, 2016, in total about 5,100 employees in Sweden, Bulgaria, China, Estonia, Hungary, India, Italy, Lithuania, Mexico, Poland, Serbia and Thailand. In 2016 AQ had net sales of EUR 343 Mill and the group has since its start in 1994 shown profit every quarter.
AQ has the highest credit rating AAA according to Bisnode

IRIS Certification

THE GLOBAL COMPACT
WE SUPPORT

AAA®
Highest creditworthiness
©Soliditet

Photo: Jörgen Appelgren

Claes Mellgren
Goup CEO

The AQ Business concept is to develop, manufacture and assemble components and systems for demanding industrial customers and leverage our commitment to Total Quality to ensure our customers become long-term business partners.

We target customers who are world leading in their respective niches, such as road and off-road vehicles, railroads, power transmission, telecommunication, food, etc. To be a world leading company, they have to work with world leading suppliers!

AQ aims to be a world leader in cost effectiveness, quality, on-time-delivery, alertness and service. In one word – reliable.

The AQ Group has grown constantly at a steady pace all from the start 1994 to today's position as a true global actor. Our finances are strong and we will continue our growth, both organically and by acquisitions.

WE ARE RELIABLE

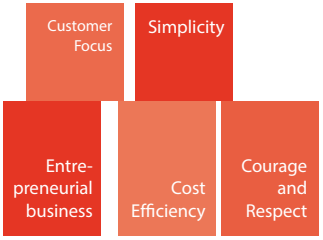

Guidelines for application design

AQ Magnit manufactures inductive components with the following parameters:

For transformers:
Rated power: 1VA – 630 kVA *
Voltages: up to 1200 V *

For Inductors:
Rated power: up to 1000 kVAr *
Voltages: up to 3,6 kV *

*Customized solutions available upon request.

For correct choice of transformer

The power rating is determined by adding the apparent secondary power figures (VA). The power ratings stated on the data sheet are the maximum power ratings in continuous operation.

If the transformer is subject to intermittent load the type size can be reduced. the amount of reduction depends on the nature of the intermittency and must be calculated in each individual case.

If an autotransformer is required, type ratings can be calculated using the following formula:

Ptype = Pout X (Umax-Umin)/Umax

where Pout is the power drawn and Umax / Umin is the highest/lowest voltage.

If the cooling of the transformer is reduced by building-in the power ratings in the tables must be reduced.

The derating factors applicable to the maximum power ratings are:
- 15% for + 50°C ambient temperature
- 30% for + 60°C ambient temperature
- 40% for + 70°C ambient temperature

The transformers are designed for 50Hz but they can be used at 60Hz.

Primary fuse
In view of the rush-in current, a delayed –action fuse with a current rating above Imax x 1.15 is recommended.

Ordering information
Quantity and type
Power rating(VA)
Degree of protection
Ambient temperature
Primary voltage
Secondary voltage
Connection arrangement (for three-phase)

Non-enclosed 1-phase transformer 15-1600 VA

Characteristics

Type	**SLMF**
Voltage	Up to 1100 V
Frequency	50-60 Hz
Temp. class	B (130°C)
Cooling method	AN
Protection index	IP 00
Ambient temp.	40°C
Applicable standards	EN 61558

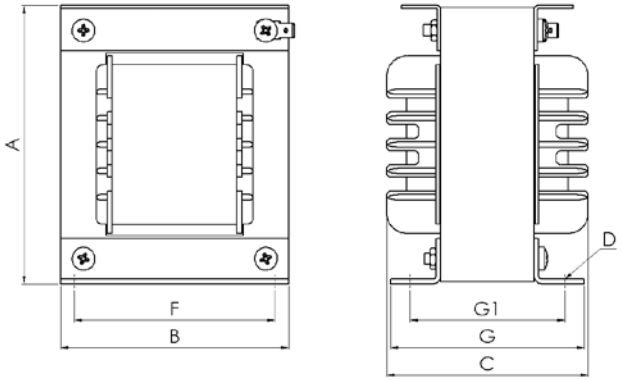

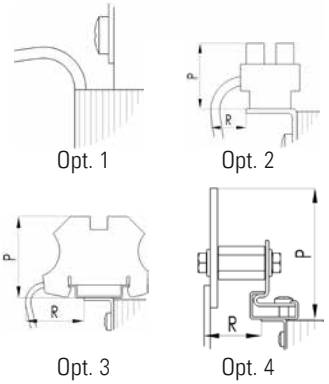

Dimensions and weights type SLMF

Type	VA	Po W	Pcu W	Ez %	A	B	C	F	G	G1	D	Kg
SLMF61	15	2	5	20.0	65	50	46	40	47	36	3.6x6.6	0.6
SLMF62	30	3	8	18.0	65	50	56	40	57	45	3.6x6.6	0.8
SLMF79	50	4	12	14.0	81	65	61	55	62	46	4.8x6.6	1.2
SLMF85	70	5	15	11.0	87	70	65	60	64	50	4.8x8.8	1.5
SLMF86	100	7	16	9.5	87	70	79	60	78	64	4.8x8.8	2.0
SLMF97	125	8	19	9.5	99	80	75	70	74	61	4.8x8.8	2.3
SLMF98	150	9	18	8.0	99	80	85	70	84	71	4.8x8.8	2.8
SLMF99	200	11	22	7.5	99	80	99	70	98	85	4.8x8.8	3.5
SLMF121	250	13	27	7.5	123	100	88	88	89	70	7.0x13.0	4.1
SLMF122	300	14	26	6.5	123	100	100	88	101	82	7.0x13.0	5.0
SLMF123	350	16	28	5.5	123	100	120	88	121	102	7.0x13.0	6.8
SLMF151	450	20	31	5.5	155	125	107	110	109	84	7.0x13.0	7.5
SLMF152	600	22	32	5.0	155	125	124	110	126	101	7.0x13.0	9.8
SLMF153	750	26	36	4.0	155	125	150	110	152	127	7.0x13.0	13.0
SLMF181	1000	32	45	4.0	187	150	150	134	125	108	7.0x13.0	14.0
SLMF182	1300	36	46	3.5	187	150	180	134	151	133	7.0x13.0	19.0
SLMF183	1600	42	50	3.0	187	150	200	134	174	156	7.0x13.0	23.0

Connector

RK cable min/max mm²	Opt.	P	R
0.5/4	2	22	13
0.5/10	2	29	18
0.5/2.5	3	62	27
0.5/6	3	62	27
0.75/10	3	62	30
0.75/25	3	71	35
6/70	3	97	64
Bar 20x5	4	80	-
Bar 30x10	4	80	-
Free term.	1	-	-

Non-enclosed 1-phase transformer 15-750 VA

Characteristics

Type	**SLMG**
Voltage	Up to 1100 V
Frequency	50-60 Hz
Temp. class	class B (130°C)
Cooling method	AN
Protection index	IP 00
Ambient temp.	40°C
Applicable standards	EN 61558

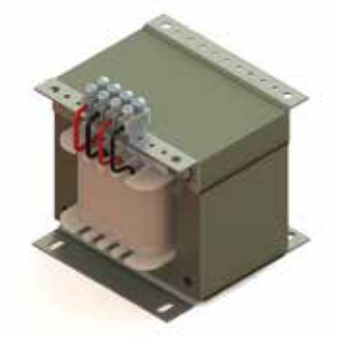

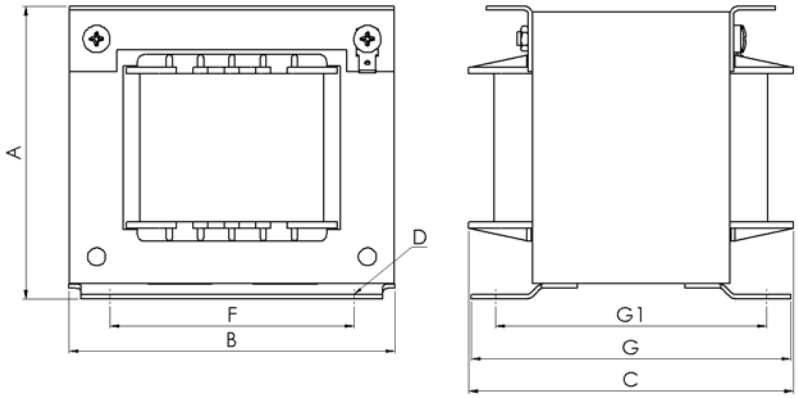

Opt. 1

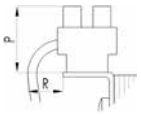

Opt. 2

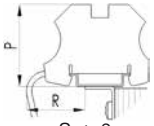

Opt. 3

Dimensions and weights type SLMG

Type	VA	Po W	Pcu W	Ez %	A	B	C	F	G	G1	D	Kg
SLMG61	15	2	5	20.0	57	60	46	44	47	36	3.6x6	0.6
SLMG62	30	3	8	18.0	57	60	56	44	57	46	3.6x6	0.8
SLMG79	50	4	12	14.0	72	78	61	56	58	46	4.8x9	1.2
SLMG85	70	5	15	11.0	77	84	65	64	60	47	4.8x8	1.5
SLMG86	100	7	16	9.5	77	84	79	64	74	61	4.8x8	2.0
SLMG97	125	8	19	9.5	89	96	75	84	77	61	5.8x9	2.3
SLMG98	150	9	18	8.0	89	96	85	84	86	70	5.8x9	2.8
SLMG99	200	11	22	7.5	89	96	99	84	100	84	5.8x9	3.5
SLMG121	250	13	27	7.5	108	120	88	90	86	68	5.8x12	4.1
SLMG122	300	14	26	6.5	108	120	100	90	98	80	5.8x12	5.0
SLMG123	350	16	28	5.5	108	120	120	90	118	100	5.8x12	6.8
SLMG151	450	20	31	5.5	134	150	107	122	104	82	7.0x15	7.5
SLMG152	600	22	32	5.0	134	150	124	122	121	99	7.0x15	9.8
SLMG153	750	26	36	4.0	134	150	150	122	147	125	7.0x15	13.0

* Core and mechanical parts are connected through weldings

Connector

RK cable min/max mm²	Opt.	P	R
0.5/4	2	22	13
0.5/10	2	29	18
0.5/2.5	3	62	27
0.5/6	3	62	27
0.75/10	3	62	30
0.75/25	3	71	35
6/70	3	97	64
Free term.	1	-	-

Non-enclosed 1-phase transformer 2500-6000 VA

Characteristics

Type	**SLDF**
Voltage	Up to 1100 V
Frequency	50-60 Hz
Temp. class	B (130°C)
Cooling method	AN
Protection index	IP 00
Ambient temp.	40°C
Applicable standards	EN 61558

Opt. 1

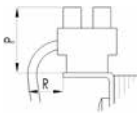

Opt. 2

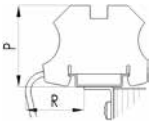

Opt. 3

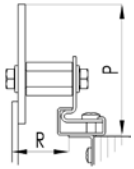

Opt. 4

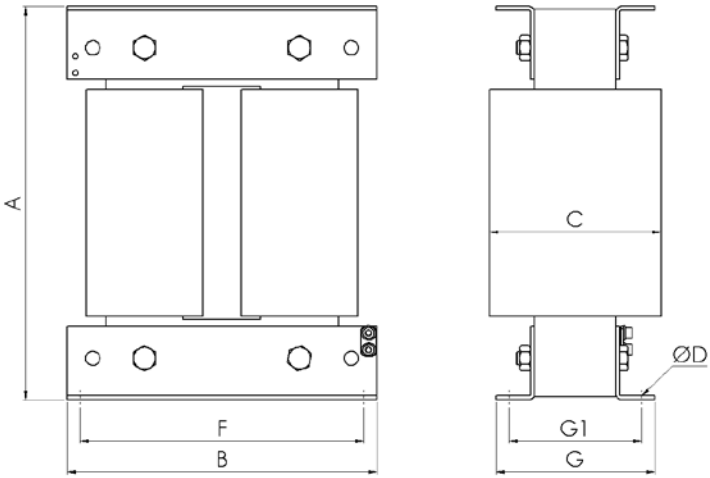

Dimensions and weights type SLDF

Type	VA	Po W	Pcu W	Ez %	A	B	C	F	G	G1	D	Kg
SLDF151	2500	43	170	5.0	255	200	132	180	112	92	9	25
SLDF152	3500	51	175	4.0	255	200	157	180	137	117	9	33
SLDF181	4500	63	200	4.0	305	240	153	220	123	103	9	38
SLDF182	5000	73	205	3.5	305	240	168	220	138	118	9	45
SLDF183	6000	75	210	3.0	305	240	183	220	153	133	9	55

Connector

RK cable min/max mm²	Opt.	P	R
0.5/4	2	22	11
0.5/10	2	29	11
0.5/2.5	3	62	16
0.5/6	3	62	16
0.75/10	3	62	19
0.75/25	3	71	26
6/70	3	97	53
Bar 20x5	4	80	35
Bar 30x10	4	80	40
Free term.	1	-	-

Catalogue numbers of 1-phase transformers type SLMF and SLDF with fixed rated powers and voltages

Transformers type SLMF and SLDF 50-2500 VA

			Catalogue number YA 111 001-					
Rated power VA	**Type**	**Prim. V Sec. V**	**220 24**	**380 24**	**220 42**	**380 42**	**220 48**	**380 48**
63	SLMF85		-BA	-BN	-CA	-CN	-DA	-DN
100	SLMF86		-BB	-BP	-CB	-CP	-DB	-DP
120	SLMF97		-BC	-BR	-CC	-CR	-DC	-DR
160	SLMF98		-BD	-BS	-CD	-CS	-DD	-DS
190	SLMF99		-BE	-BT	-CE	-CT	-DE	-DT
225	SLMF121		-BF	-BU	-CF	-CU	-DF	-DU
300	SLMF122		-BG	-BV	-CG	-CV	-DG	-DV
390	SLMF123		-BH	-BX	-CH	-CX	-DH	-DX
480	SLMF151		-BK	-BY	-CK	-CY	-DK	-DY
600	SLMF152		-BL	-BZ	-CL	-CZ	-DL	-DZ
770	SLMF153		-BM	-AU	-CM	-AV	-DM	-AX

Connection of transformers

Connection terminal	
Primary No.*/ marking	**Secondary No.*/ marking**
I / 1-2	II / 6-7**

*See dimension drawing, page 5 **For transformers type SLMF 152 and 153 with ratios 220/24 and 380/24 V (Cat. Nos. YA 111 001-BL, -BM, -BZ and -AU) connector II (0,5/10) marking 5-6 must be used.

Transformers type SLMF and SLDF 17-6000 VA

			Catalogue number YA 111 001-								
Rated power VA	**Type**	**Prim. V Sec. V**	**220 110**	**380 110**	**440 110**	**550 110**	**380 220**	**440 220**	**500 220**	**440 380**	**500 380**
17	SLMF61		-GA	-HA	-KA	-LA	-MA	-NA	-PA	-RA	-SA
28	SLMF62		-GB	-HB	-KB	-LB	-MB	-NB	-PB	-RB	-SB
50	SLMF79		-GC	-HC	-KC	-LC	-MC	-NC	-PC	-RC	-SC
70	SLMF85		-GD	-HD	-KD	-LD	-MD	-ND	-PD	-RD	-SD
100	SLMF86		-GE	-HE	-KE	-LE	-ME	-NE	-PE	-RE	-SE
120	SLMF97		-GF	-HF	-KF	-LF	-MF	-NF	-PF	-RF	-SF
150	SLMF98		-GG	-HG	-KG	-LG	-MG	-NG	-PG	-RG	-SG
200	SLMF99		-GH	-HH	-KH	-LH	-MH	-NH	-PH	-RH	-SH
250	SLMF121		-GK	-HK	-KK	-LK	-MK	-NK	-PK	-RK	-SK
300	SLMF122		-GL	-HL	-KL	-LL	-ML	-NL	-PL	-RL	-SL
400	SLMF123		-GM	-HM	-KM	-LM	-MM	-NM	-PM	-RM	-SM
500	SLMF151		-GN	-HN	-KN	-LN	-MN	-NN	-PN	-RN	-SN
650	SLMF152		-GP	-HP	-KP	-LP	-MP	-NP	-PP	-RP	-SP
800	SLMF153		-GR	-HR	-KR	-LR	-MR	-NR	-PR	-RR	-SR
1100	SLMF181		-GS	-HS	-KS	-LS	-MS	-NS	-PS	-RS	-SS
1350	SLMF182		-GT	-HT	-KT	-LT	-MT	-NT	-PT	-RT	-ST
1700	SLMF183		-GU	-HU	-KU	-LU	-MU	-NU	-PU	-RU	-SU
2400	SLDF151		-GV	-HV	-KV	-LV	-MV	-NV	-PV	-RV	-SV
3400	SLDF152		-GX	-HX	-KX	-LX	-MX	-NX	-PX	-RX	-SX
4500	SLDF181		-GY	-HY	-KY	-LY	-MY	-NY	-PY	-RY	-SY
5400	SLDF182		-GZ	-HZ	-KZ	-LZ	-MZ	-NZ	-PZ	-RZ	-SZ
6000	SLDF183		-AH	-AK	-AL	-AM	-AN	-AP	-AR	-AS	-AT

Connection of transformers

Type	Connection terminal	
	Primary No.*/mark-ing	**Secondary No.*/mark-ing**
SLMF	I / 1-2	II / 6-7**
SLDF151,152	II / 1-2	II / 3-4
SLDF181,182,183	V / 1-2	V / 3-4

*See dimension drawings, pages 5 and 7.

Catalogue numbers of 1-phase transformers type SLMF and SLDF with fixed rated powers and voltages

Transformers type SLMF and SLDF 50-2500 VA

Catalogue number YA 111 001-					
Rated power VA	**Type**	**Prim. V Sec. V**	**210-220-230 4x55**	**380-400-420-440 4x55**	**475-500-525 4x55**
50	SLMF86		-A	-B	-C
150	SLMF99		-D	-E	-F
250	SLMF123		-G	-H	-K
600	SLMF153		-L	-M	-N
1200	SLMF182		-P	-R	-S
2500	SLDF152		-	-T	-U

Connection of transformers

Primary Voltage V	**Connection terminals No.*/ marking**	**Secondary Voltage V**	**Connection terminals No.*/ marking**	**Junction****
210	I / 1-2	55	I / 10-17	I / 10-12-14-16
220	I / 1-3			I / 11-13-15-17
230	I / 1-4	110	I / 10-17	I / 11-12
380	I / 1-2			I / 15-16
400	I / 1-3			I / 10-14
420	I / 1-4			I / 13-17
440	I / 1-5	220	I / 10-17	I / 11-12
475	I / 1-2			I / 13-14
500	I / 1-3			I / 15-16
525	I / 1-4			

*See dimension drawings, pages 5 and 7.

**For transformers type SLDF152 (Cat. Nos. YA 111 001-T and -U) connector II (0,5/10) must be used.

Transformers type SLDF 4000 VA

Catalogue number YA 111 001-				
Rated power VA	**Type**	**Prim. V Sec. V**	**380-400-420-440 2x110**	**475-500-525 2x110**
4000	SLDF182		-V	-X

Connection of transformers

Primary Voltage V	**Connection terminals No.*/marking**	**Secondary Voltage V**	**Connection terminals No.*/marking**	**Junction****
380	I / 1-2	110	V / 7-10	V / 7-9
400	I / 1-3			V / 8-10
420	I / 1-4	220	V / 7-10	V / 8-9
440	I / 1-5			
475	I / 1-2			

Non-enclosed 1-phase transformer 20-420 VA

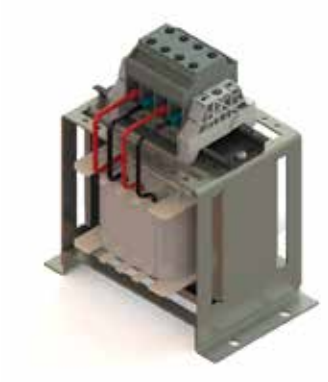

Characteristics

Type	**SLCE**
Voltage	Up to 1100 V
Frequency	50-60 Hz
Temp. class	B (130°C)
Cooling method	AN
Protection index	IP 00
Ambient temp.	40°C
Applicable standards	EN 61558

Opt. 1

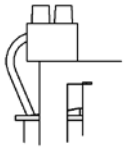

Opt. 2

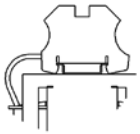

Opt. 3

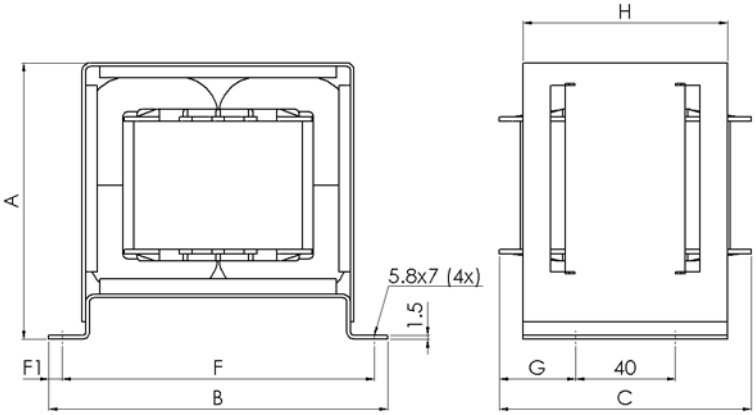

Dimensions and weights type SLCE

Type	VA	A	B	C	F	F1	G	H	Kg
SLCE2	20	79	97	56	85	6	8	56	0.8
SLCE4	50	90	110	62	100	5	11	62	1.3
SLCE6	70	95	115	65	100	7.5	12.5	62	1.5
SLCE8	110	95	115	79	100	7.5	19.5	78	2.1
SLCE10	160	110	136	89	125	5.5	24.5	78	2.8
SLCE12	250	110	136	102	125	5.5	31	82	3.5
SLCE14	350	130	160	106	145	7.5	33	78	4.7
SLCE16	420	130	160	116	145	7.5	38	82	5.5

Connector

RK cable min/max mm²	Opt.	P	R
0.5/4	2	22	10
0.5/6	3	60	9
0.5/10	2	27	15
0.75/10	3	60	12
0.75/25	3	69	21
6/70	3	78	13
Free term.	1	-	-

Non-enclosed 1-phase transformer 6-400 kVA

Characteristics

Type	**SLDC**
Voltage	Up to 1200 V
Frequency	50-60 Hz
Temp. class	F (155°C)
Cooling method	AN
Protection index	IP 00
Ambient temp.	40°C
Applicable standards	EN 60076

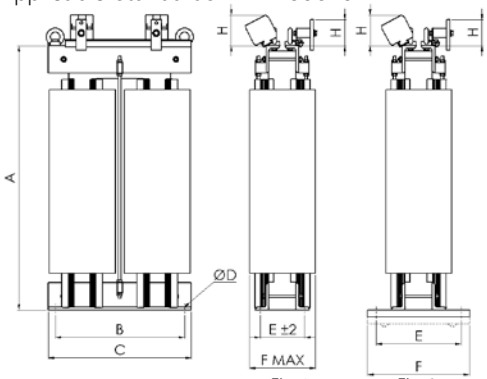

Fig. 1 Fig. 2

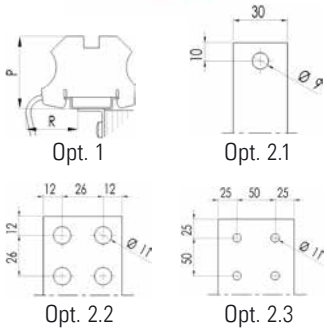

Opt. 1 Opt. 2.1 Opt. 2.2 Opt. 2.3

Dimensions and weights type SLDC

Type	kVA	Po W	Pcu W	Ez %	A	B	C	D	E	F	Kg	Fig.
SLDC6	6.3	100	300	4.5	475	260	305	13	105	215	60	1
SLDC10	8	140	450	5.2	655	260	305	13	105	215	80	1
SLDC10	10	140	475	4.4	655	260	305	13	105	215	90	1
SLDC15	12.5	180	780	5.9	580	380	425	13	130	300	100	1
SLDC15	16	180	730	4.9	580	380	425	13	130	310	115	1
SLDC15	20	180	800	5.1	580	380	425	13	130	320	125	1
SLDC30	25	225	1000	4.4	780	380	425	13	130	300	140	1
SLDC30	31.5	225	1300	5.2	780	380	425	13	130	315	175	1
SLDC40	40	340	1200	3.8	720	440	525	21	150	340	215	1
SLDC70	50	450	2100	4.6	1070	250	525	21	470	550	250	2
SLDC70	63	450	2100	4.2	1070	250	525	21	470	550	270	2
SLDC70	80	300	2100	3.5	1070	250	525	21	470	550	300	2
SLDC120	100	620	2100	2.1	1130	330	605	21	470	550	420	2
SLDC120	125	620	2200	2.2	1130	330	605	21	470	550	450	2
SLDC120	160	620	2400	2.7	1130	330	605	21	470	550	530	2
SLDC200	200	1050	2800	1.9	1190	460	740	21	470	550	730	2
SLDC200	250	1050	3000	2.2	1190	460	740	21	470	550	800	2
SLDC350	315	1250	4300	2.0	1590	460	740	21	470	550	900	2
SLDC350	400	1250	5000	2.5	1590	460	740	21	470	550	1050	2

Term./Bar

Curr. App.(A)	Area mm²	H	Opt.
12	6	55	1
30	16	60	1
70	35	70	1
150	70	95	1
500	-	80	2.1
800	-	110	2.2
1500	-	160	2.3

Enclosed 1-phase transformer 4-400 kVA

Characteristics

Type	**SKDC**
Voltage	Up to 1200 V
Frequency	50-60 Hz
Temp. class	F (155°C)
Cooling method	AN
Protection index	IP 22
Ambient temp.	40°C
Applicable standards	EN 60076
Enclosure	Sheet steel 1.5mm 2-component powder painted (RAL7032)

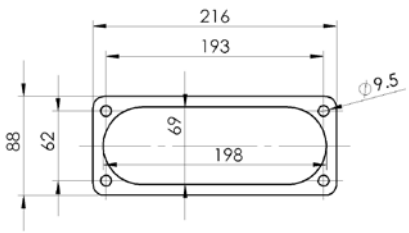

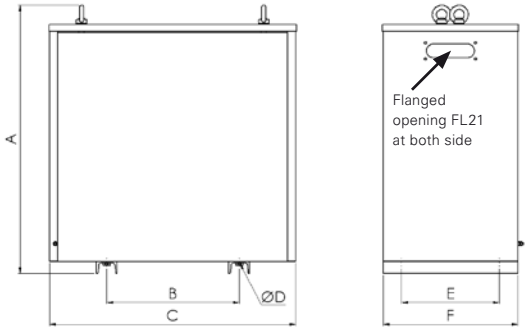

Dimensions and weights type SKDC

Type	kVA	Po W	Pcu W	Ez %	A	B	C	D	E	F	Kg
SKDC6	6.3	100	270	Ez	715	260	380	13	180	310	85
SKDC10	8	140	430	%	890	260	380	13	180	310	100
SKDC10	10	140	430	4.0	890	260	380	13	180	310	115
SKDC15	12.5	180	730	4.8	880	380	550	13	310	440	135
SKDC15	16	180	730	4.0	880	380	550	13	310	440	150
SKDC15	20	180	730	5.5	880	380	550	13	310	440	165
SKDC30	25	225	1100	4.8	1070	380	550	13	310	440	185
SKDC30	31.5	225	1100	5.0	1070	380	550	13	310	440	210
SKDC40	40	340	1100	4.3	1025	250	680	21	376	525	265
SKDC70	50	450	1850	5.0	1355	250	670	21	376	525	320
SKDC70	63	450	1900	3.7	1355	250	670	21	376	525	335
SKDC70	80	300	2000	4.1	1355	250	670	21	376	525	365
SKDC120	100	620	2000	4.0	1485	330	800	21	466	615	500
SKDC120	125	620	2000	3.5	1485	330	800	21	466	615	540
SKDC120	160	620	2300	2.2	1485	330	800	21	466	615	620
SKDC200	200	1050	2600	2.1	1585	460	930	21	530	680	830
SKDC350	250	1050	2900	2.6	1985	460	930	21	530	680	980
SKDC350	315	1250	4300	1.8	1985	460	930	21	530	680	1100
SKDC350	400	1250	4700	2.1	1985	460	930	21	530	680	1200

Non-enclosed 3-phase transformer 50-8000 VA

Characteristics

Type	SLTF
Voltage	Up to 1100 V
Frequency	50-60 Hz
Temp. class	class B (130°C)
Cooling method	AN
Protection index	IP 00
Ambient temp.	40° C
Applicable standards	EN 61558

Dimensions and weights type SLTF

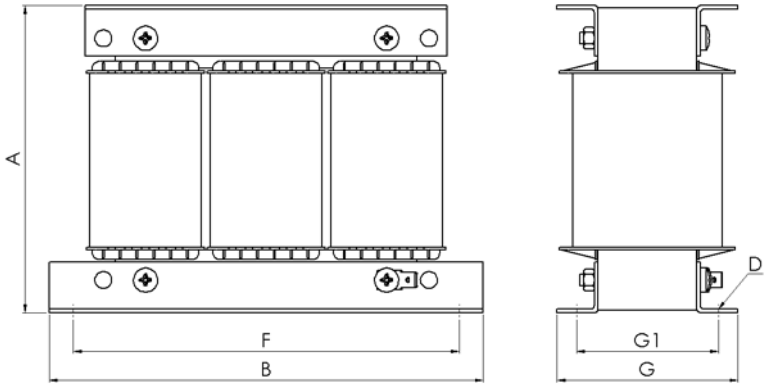

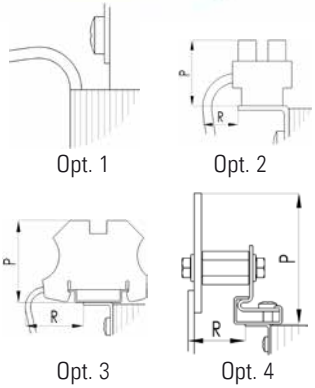

Connector

Type	VA	Po W	Pcu W	Ez %	A	B	F	G	G1	D	Kg
SLTF0020	25	2	5	20.0	82	120	80	56	40	5	1.5
SLTF0045	50	4	9	17.0	102	150	130	51	38	5.5x7.5	2
SLTF0070	80	5	13	15.0	102	150	130	61	48	5.5x7.5	3
SLTF0140	155	7	26	15.0	127	180	160	60	47	5.8x10.8	4
SLTF0250	275	11	31	10.0	127	180	160	75	62	5.8x10.8	6
SLTF0370	410	15	45	10.0	152	210	190	80	62	7x13	8
SLTF0520	570	19	47	7.5	177	240	220	77	59	7x13	11
SLTF0850	935	26	67	6.5	202	270	250	91	71	9x13	15
SLTF1.2	1320	39	73	5.0	202	270	250	111	91	9x13	22
SLTF2	2200	50	110	4.5	252	330	310	112	92	9x13	30
SLTF3	3000	80	180	6.0	264	300	280	112	88	9x13	37
SLTF4	4000	100	200	5.0	264	300	280	137	113	9x13	50
SLTF6	6000	125	250	4.0	314	360	340	123	103	9x13	60
SLTF7	7000	150	270	3.5	314	360	340	138	118	9x13	67
SLTF8	8000	180	300	3.0	314	360	340	153	133	9x13	82

RK cable min/max mm^2	Opt.	P	R
0.5/4	2	22	15
0.5/6	3	62	20
0.5/10	2	27	15
0.75/10	3	62	30
0.75/25	3	71	35
6/70	3	97	50
Bar 20x5	4	80	55
Bar 30x10	4	80	60
Free term.	1	-	-

Non-enclosed 3-phase transformer 8-630 kVA

Characteristics

Type	**SLTC**
Voltage	Up to 1200 V
Frequency	50-60 Hz
Temp. class	F (155°C)
Cooling method	AN
Protection index	IP 00
Ambient temp.	40°C
Applicable standards	EN 60076

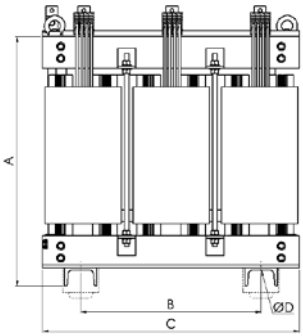

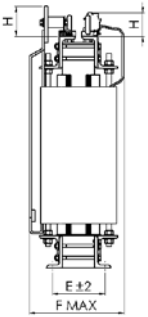

Fig. 1

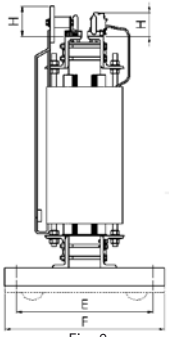

Fig. 2

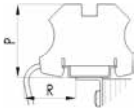

Opt. 1

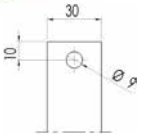

Opt. 2.1

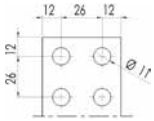

Opt. 2.2

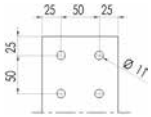

Opt. 2.3

Dimensions and weights type SLTC

Type	kVA	Po W	Pcu W	Ez %	A	B	C	D	E	F	Kg	Fig.
SLTC9	8	165	450	5.0	475	410	450	13	105	210	90	1
SLTC9	10	165	450	4.2	475	410	450	13	105	215	100	1
SLTC15	12.5	220	720	5.3	655	410	450	13	105	215	120	1
SLTC15	16	220	720	4.2	655	410	450	13	105	215	130	1
SLTC25	20	280	1300	5.6	580	600	645	13	130	300	155	1
SLTC25	25	280	1300	5.4	580	600	645	13	130	310	170	1
SLTC25	31.5	280	1300	5.6	580	600	645	13	130	320	190	1
SLTC40	40	350	1900	5.3	780	600	645	13	130	300	220	1
SLTC40	50	350	1900	5.1	780	600	645	13	130	315	255	1
SLTC60	63	540	1900	4.0	720	700	785	21	150	340	325	1
SLTC100	80	700	3300	4.3	1070	510	785	21	470	550	380	2
SLTC100	100	500	3400	3.7	1070	510	785	21	470	550	400	2
SLTC100	125	500	3400	3.7	1070	510	785	21	470	550	440	2
SLTC180	160	700	3400	2.6	1130	630	885	21	466	606	630	2
SLTC180	200	700	3400	3.1	1130	630	885	21	470	550	680	2
SLTC180	250	700	4000	4.2	1130	630	885	21	470	550	800	2
SLTC300	315	1200	4400	2.4	1190	830	1110	21	470	550	1100	2
SLTC300	400	1200	5100	3.1	1190	830	1110	21	470	550	1200	2
SLTC500	500	1400	7200	2.8	1590	830	1110	21	470	550	1350	2
SLTC500	630	1400	8650	3.8	1590	830	1110	21	470	550	1550	2

Term./Bar

Curr. App.(A)	Area (mm^2)	H	Opt.
12	6	55	1
30	16	60	1
70	35	70	1
150	70	95	1
500	-	80	2.1
800	-	110	2.2
1500	-	160	2.3

If trolley is included, dim. A should be increased with 60 mm

Enclosed 3-phase transformer 3-630 kVA

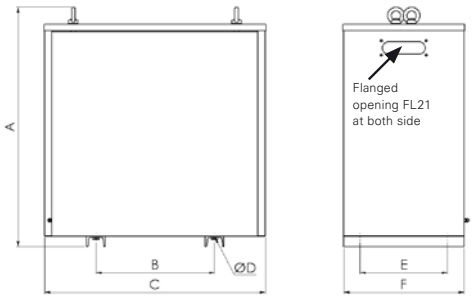

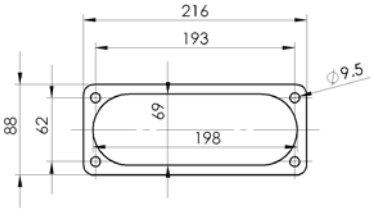

Characteristics

Type	**SKTC**
Voltage	Up to 1200 V
Frequency	50-60 Hz
Temp. class	F (155°C)
Cooling method	AN
Protection index	IP 22
Ambient temp.	40°C
Applicable standards	EN 60076
Enclosure	Sheet steel 1.5mm 2-component powder painted (RAL7032)

Dimensions and weights type SKTC

Type	kVA	Po W	Pcu W	Ez %	A	B	C	D	E	F	Kg
SKTC9	8	170	400	4.5	715	410	530	13	180	310	120
SKTC9	10	170	400	3.6	715	410	530	13	180	310	130
SKTC15	12.5	220	650	4.8	890	410	530	13	180	310	155
SKTC15	16	220	650	3.7	890	410	530	13	180	310	170
SKTC25	20	300	1100	5.2	880	600	760	13	310	440	205
SKTC25	25	300	1100	4.7	880	600	760	13	310	440	220
SKTC25	31.5	300	1100	5.3	880	600	760	13	310	440	240
SKTC40	40	350	1800	4.8	1070	600	760	13	310	440	280
SKTC40	50	350	1800	5.3	1070	600	760	13	310	440	325
SKTC60	63	550	1800	3.6	1025	510	945	21	376	525	400
SKTC100	80	700	3000	4.3	1365	510	945	21	376	525	480
SKTC100	100	500	3000	3.2	1365	510	945	21	376	525	500
SKTC100	125	500	3000	3.6	1365	510	945	21	376	525	550
SKTC180	160	700	3300	2.5	1485	630	1100	21	466	615	740
SKTC180	200	700	3300	3.0	1485	630	1100	21	466	615	810
SKTC180	250	700	3300	3.9	1485	630	1100	21	466	615	930
SKTC300	315	1200	4000	2.4	1585	830	1300	21	530	680	1250
SKTC500	400	1450	6000	2.3	1985	830	1300	21	530	680	1470
SKTC500	500	1450	6000	2.7	1985	830	1300	21	530	680	1630
SKTC500	630	1450	6000	3.8	1985	830	1300	21	530	680	1800

Non-enclosed 3-phase transformer 4-500 kVA

Characteristics

Type	**SLTM**
Voltage	Up to 1200 V
Cooling method	AN
Temp. class	F (155°C)
Connection group	Under request
Protection index	IP 00
Ambient temp.	Normally 40°C
Core	Oriented electrical steel
Standard	EN 60076

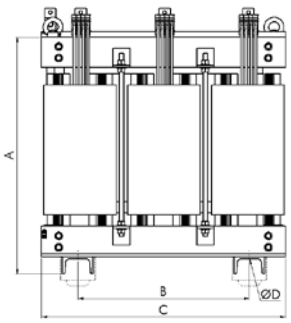

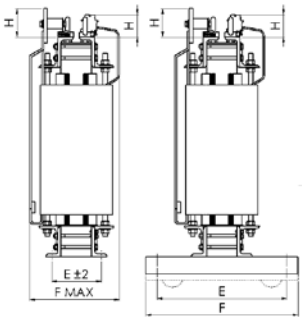

Fig. 1 Fig. 2

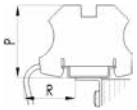

Opt. 1

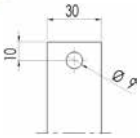

Opt. 2.1

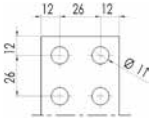

Opt. 2.2

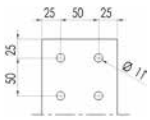

Opt. 2.3

Dimensions and weights type SLTM

Type	kVA	Po W	Pcu W	Ez %	A	B	C	D	E	F	Kg	Fig.
SLTM4	4				205	240	415	14	126	275	50	1
SLTM5	5	70	160	3.1	215	240	415	14	126	275	55	1
SLTM6.3	6.3	70	200	3.0	235	240	415	14	126	275	60	1
SLTM8	8	75	260	3.2	265	240	415	14	126	275	70	1
SLTM10	10	150	190	2.3	245	360	595	14	158	380	120	1
SLTM12.5	12.5	160	200	2.5	266	360	595	14	158	380	130	1
SLTM16	16	165	280	2.2	285	360	595	14	158	380	145	1
SLTM20	20	200	380	2.1	306	360	595	14	178	400	175	1
SLTM25	25	200	400	2.0	326	360	595	14	178	400	185	1
SLTM31.5	31.5	210	500	2.0	356	360	595	14	178	400	220	1
SLTM40	40	430	570	4.5	350	480	775	22	226	510	300	1
SLTM50	50	440	780	4.4	370	480	775	22	226	510	320	1
SLTM63	63	450	940	4.1	400	480	775	22	226	510	350	1
SLTM80	80	600	1050	3.9	400	480	775	22	266	550	420	1
SLTM100	100	600	1300	4.1	430	480	775	22	266	550	465	1
SLTM125	125	680	1470	3.7	690	600	945	22	442	555	650	2
SLTM160	160	720	1800	3.9	750	600	945	22	442	555	720	2
SLTM200	200	760	2250	3.6	830	600	945	22	442	555	810	2
SLTM250	250	800	2900	4.0	910	600	945	22	442	555	920	2
SLTM315	315	1260	2800	3.0	922	700	1095	22	542	655	1280	2
SLTM400	400	1350	3500	3.1	1032	700	1095	22	542	655	1450	2
SLTM500	500	1450	4500	3.1	1152	700	1095	22	542	655	1650	2

Term./Bar

Curr. App.(A)	Area (mm^2)	H	Opt.
12	6	55	1
30	16	60	1
70	35	70	1
150	70	95	1
500	-	80	2.1
800	-	110	2.2
1500	-	160	2.3

If trolley is included, dim. A should be increased with 60 mm

Enclosed 3-phase transformer 3-500 kVA

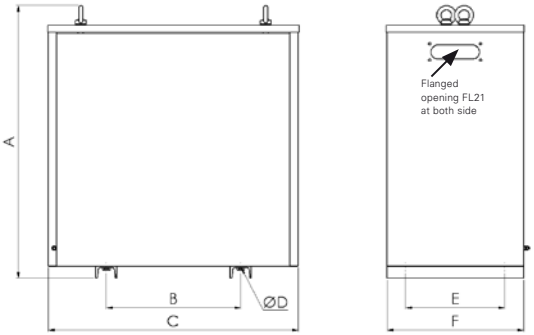

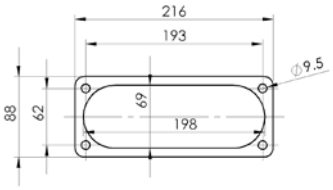

Characteristics

Type	**SKTM**
Voltage	Up to 1200 V
Frequency	50-60 Hz
Temp. class	F (155°C)
Cooling method	AN
Protection index	IP 22
Ambient temp.	40°C
Applicable standards	EN 60076
Enclosure	Sheet steel 1.5mm 2-component powder painted (RAL7032)

Dimensions and weights type SKTM

Type	kVA	Po W	Pcu W	Ez %	A	B	C	D	E	F	Kg
SKTM6.3	5	70	180	3.4	505	240	525	14	240	370	75
SKTM8	6.3	75	200	3.1	505	240	525	14	240	370	85
SKTM10	8	150	160	2.1	555	360	740	14	360	490	145
SKTM12.5	10	160	190	2.1	555	360	740	14	360	490	150
SKTM16	12.5	160	240	2.0	555	360	740	14	360	490	160
SKTM20	16	200	270	1.7	625	360	740	14	380	510	190
SKTM25	20	200	330	1.8	625	360	740	14	380	510	200
SKTM31.5	25	210	400	1.8	625	360	740	14	380	510	220
SKTM40	31.5	425	470	3.5	730	480	945	22	490	640	350
SKTM50	40	235	620	3.2	730	480	945	22	490	640	375
SKTM63	50	450	800	2.8	730	480	945	22	490	640	400
SKTM80	63	600	930	2.9	780	480	945	22	530	680	470
SKTM100	80	600	1000	2.9	780	480	945	22	530	680	500
SKTM125	100	680	1200	2.7	1130	600	1155	22	530	680	700
SKTM160	125	720	1500	2.7	1130	600	1155	22	530	680	760
SKTM200	160	760	1950	2.6	1290	600	1155	22	530	680	830
SKTM250	200	800	2250	2.8	1290	600	1155	22	530	680	910
SKTM315	250	1260	2350	2.1	1580	700	1325	22	610	760	1275
SKTM400	315	1350	3100	2.1	1580	700	1325	22	610	760	1430
SKTM500	400	1450	3800	2.1	1580	700	1325	22	610	760	1575
SKTM500	500	1450	3800	3.5	1580	700	1325	22	610	760	1575

Non-enclosed 3-phase transformer 4-100 kVA

Characteristics

Type	**SLTK**
Voltage	Up to 1200 V
Frequency	50-60 Hz
Temp. class	F (155°C)
Cooling method	AN
Protection index	IP 00
Ambient temp.	40°C
Applicable standards	EN 60076

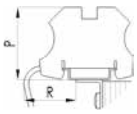

Opt. 1

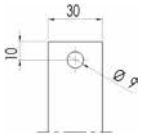

Opt. 2.1

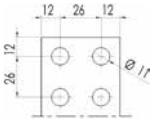

Opt. 2.2

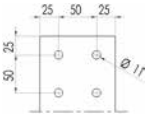

Opt. 2.3

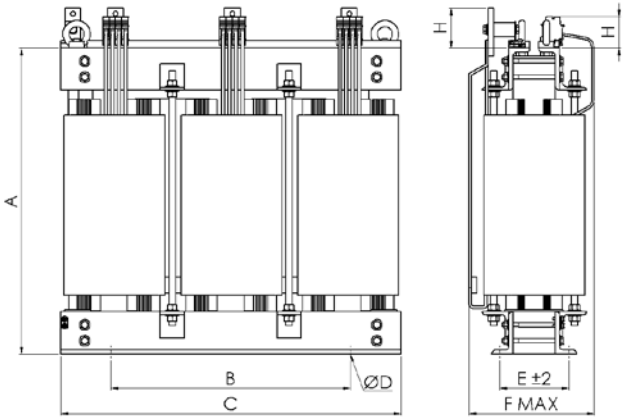

Dimensions and weights type SLTK

Type	kVA	A	B	C	D	E	F	Kg
SLTK4	4	215	220	385	14	136	295	55
SLTK5	5	235	220	385	14	136	295	60
SLTK6.3	6.3	265	220	385	14	136	295	65
SLTK8	8	295	220	385	14	136	295	75
SLTK10	10	325	220	385	14	136	295	85
SLTK12.5	12.5	385	220	385	14	136	295	100
SLTK16	16	455	220	385	14	136	295	115
SLTK20	20	535	220	385	14	136	295	135
SLTK25	25	635	220	385	14	136	295	160
SLTK31.5	31.5	446	300	505	14	168	390	180
SLTK40	40	526	300	505	14	168	390	210
SLTK50	50	606	300	505	14	168	390	245
SLTK63	63	656	300	505	14	168	410	290
SLTK80	80	776	300	505	14	168	410	340
SLTK100	100	896	300	505	14	168	410	400

Term./Bar

Curr. App.(A)	Area mm²	H	Opt.
12	6	55	1
30	16	60	1
70	35	70	1
150	70	95	1
500	-	80	2.1
800	-	110	2.2
1500	-	160	2.3

If trolley is included, dim. A should be increased with 60

Non-enclosed 1-phase inductor 60-3200 VAr

Characteristics

Type	**SLMF...R**
Voltage	Up to 1000 V
Frequency	50-60 Hz
Temp. class	B (130°C)
Cooling method	AN
Protection index	IP 00
Ambient temp.	40°C
Applicable standards	EN 61558

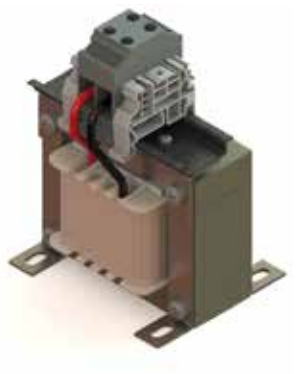

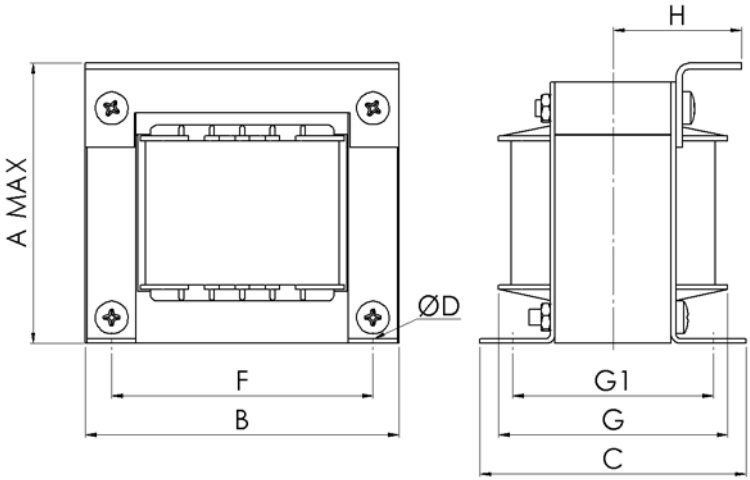

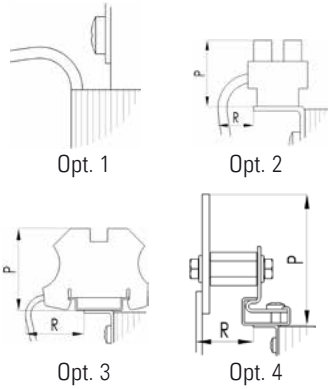

Dimensions and weights type SLMF...R

Type	VAr	Po W	Pcu W	Ez %	A	B	C	D	F	G	G1	H	Kg
SLMF62R	60	3	8	18.0	60	60	56	3.6	50	57	49	29	0.8
SLMF79R	100	4	12	14.0	73	78	61	4.8	65	62	52	30	1.2
SLMF86R	200	7	16	9.5	78	84	79	4.8	70	78	67	38	2.0
SLMF98R	300	9	18	8.0	88	96	85	4.8	80	84	71	44	2.8
SLMF99R	400	11	22	7.5	88	96	99	4.8	80	98	85	51	3.5
SLMF122R	600	14	26	6.5	108	120	100	7.0	100	100	82	50	5.0
SLMF123R	700	16	28	5.5	108	120	120	7.0	100	120	102	60	6.8
SLMF152R	1200	22	32	5.0	135	150	124	7.0	125	125	101	61	9.8
SLMF153R	1500	26	36	4.0	135	150	150	7.0	125	151	127	74	13.0
SLMF182R	2600	36	46	3.5	162	180	180	7.0	150	153	133	62	19.0
SLMF183R	3200	42	50	3.0	162	180	200	7.0	150	176	156	73	23.0

Connector

RK cable min/max mm²	Opt.	P	R
0.5/4	2	22	13
0.5/10	2	29	18
0.5/2.5	3	62	27
0.5/6	3	62	27
0.75/10	3	62	31
0.75/25	3	71	36
6/70	3	97	63
Bar 20x5	4	80	45
Bar 30x10	4	80	50
Free term.	1	-	-

Non-enclosed 1-phase inductor 7-12 kVAr

Characteristics

Type	**SLDF...R**
Voltage	Up to 1100 V
Frequency	50-60 Hz
Temp. class	B (130°C)
Cooling method	AN
Protection index	IP 00
Ambient temp.	40°C
Applicable standards	EN 61558

Opt. 1

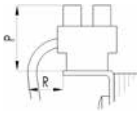

Opt. 2

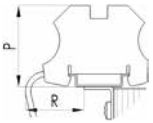

Opt. 3

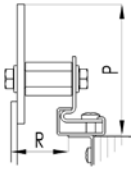

Opt. 4

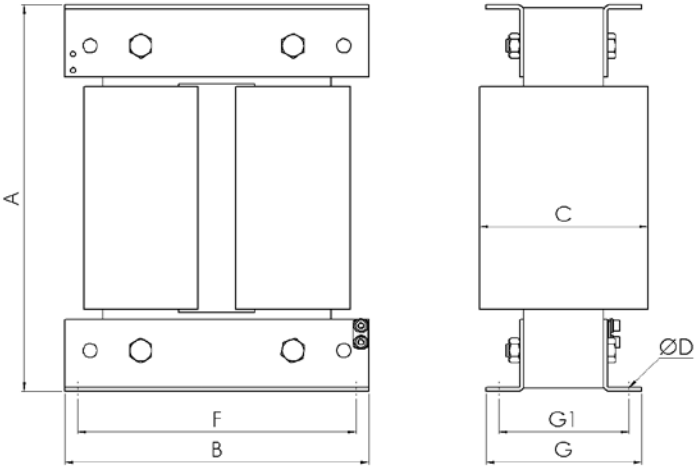

Dimensions and weights type SLDF...R

Type	kVAr	A	B	C	F	G	G1	D	Kg
SLDF152R	7	260	200	157	180	140	120	9	33
SLDF182R	10	310	240	168	220	141	121	9	45
SLDF183R	12	310	240	183	220	156	136	9	55

Connector

RK cable min/max mm²	Opt.	P	R
0.5/4	2	2	11
0.5/10	2	2	11
0.5/2.5	3	3	16
0.5/6	3	3	16
0.75/10	3	3	19
0.75/25	3	3	26
6/70	3	3	53
Bar 20x5	4	4	35
Bar 30x10	4	4	40
Free term.	1	1	-

Non-enclosed 1-phase D.C. inductor 7.5-370 kVAr

Characteristics

Type	**XLDD**
Voltage	Up to 3.6 kV
Frequency	50-60 Hz
Temp. class	F (155°C)
Cooling method	AN
Protection index	IP 00
Ambient temp.	40°C
Applicable standards	EN 60076

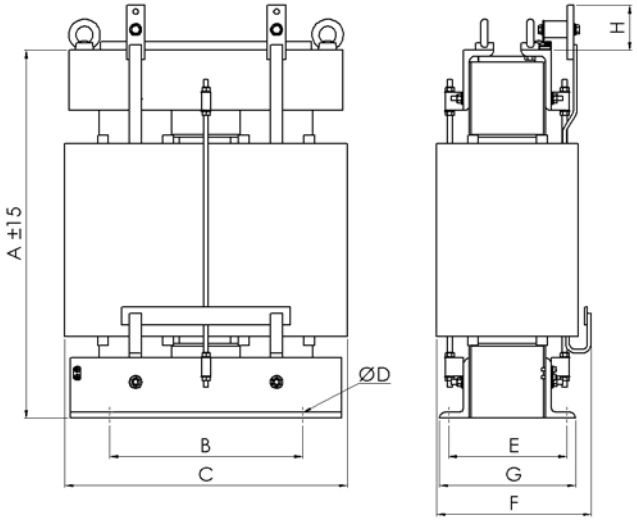

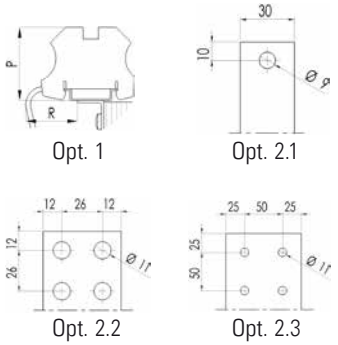

Dimensions and weights type XLDD

Type	kVAr	Pcu W	A	B	C	D	E	F	G	Kg
XLDD5	7.5	140	315	260	310	13	112	175	136	60
XLDD8	12	140	310	320	370	13	146	205	176	80
XLDD12	18	240	360	320	370	13	146	205	176	90
XLDD24	35	350	455	320	430	13	186	235	216	155
XLDD30	45	420	475	320	454	13	196	245	226	170
XLDD60	90	730	625	320	454	13	196	245	226	225
XLDD100	140	900	735	320	500	21	232	310	280	400
XLDD160	220	1300	1010	320	500	21	232	310	280	525
XLDD250	370	1600	1040	320	606	21	332	350	390	810

Term./Bar

Curr. App.(A)	Area (mm^2)	H	Opt.
12	6	55	1
30	16	60	1
70	35	70	1
150	70	95	1
500	-	80	2.1
800	-	110	2.2
1500	-	160	2.3

Non-enclosed 1-phase A.C. inductor 120-1000 kVAr

Characteristics

Type	**XLDD**
Voltage	Up to 3.6 kV
Frequency	50-60 Hz
Temp. class	F (155°C)
Cooling method	AN
Protection index	IP 00
Ambient temp.	40°C
Applicable standards	EN 60076

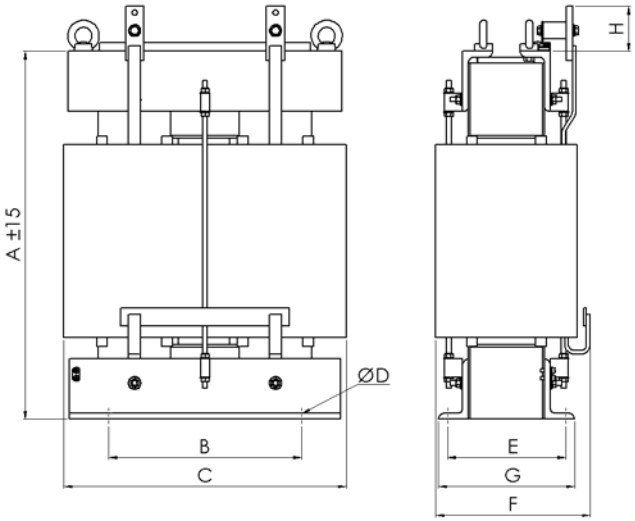

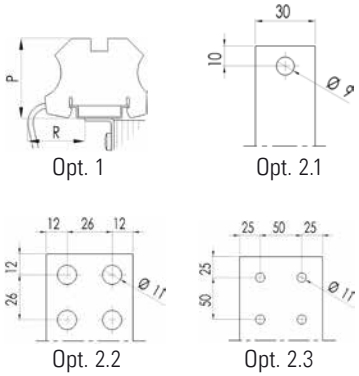

Dimensions and weights type XLDD

Type	kVAr	Po W	Pcu W	A	B	C	D	E	F	G	Kg
XLDD120	120	400	750	790	250	490	18	194	295	236	365
XLDD240	240	450	1900	840	310	610	18	194	295	236	500
XLDD480	480	800	2800	1120	320	630	22	230	355	282	760
XLDD960	960	1500	4200	1410	370	730	22	282	395	342	1340

Term./Bar

Curr. App.(A)	Area (mm^2)	H	Opt.
12	6	55	1
30	16	60	1
70	35	70	1
150	70	95	1
500	-	80	2.1
800	-	110	2.2
1500	-	160	2.3

Non-enclosed 1-phase A.C. inductor 6-160 kVAr

Characteristics

Type	**SLDM...R**
Voltage	Up to 3.6 kV
Frequency	50-60 Hz
Temp. class	class F (155°C)
Cooling method	AN
Protection index	IP 00
Ambient temp.	40°C
Applicable standards	EN 60076

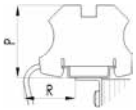

Opt. 1

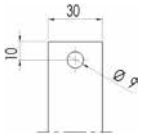

Opt. 2.1

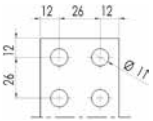

Opt. 2.2

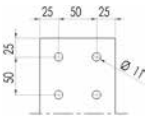

Opt. 2.3

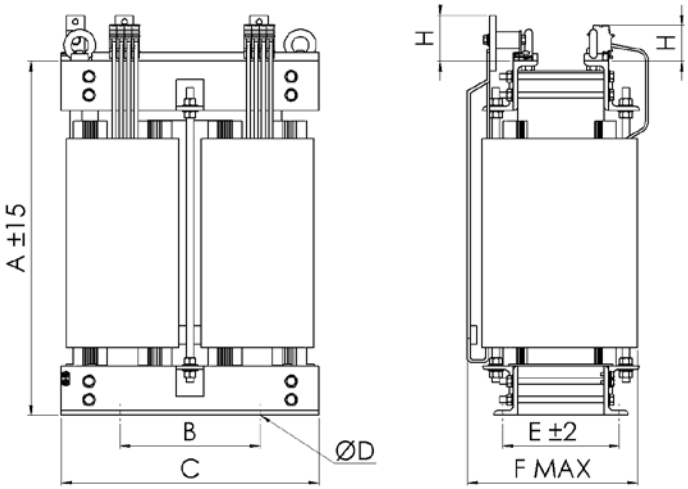

Dimensions and weights type SLDM...R

Type	kVAr	Po W	Pcu W	A	B	C	D	E	F	Kg
SLDM15D03R	6	35	120	215	90	255	14	136	234	37
SLDM15D05R	8	40	140	235	90	255	14	136	234	40
SLDM15D07R	10	45	170	265	90	255	14	136	234	43
SLDM15D08R	12	50	200	295	90	255	14	136	234	50
SLDM15D09R	16	55	260	325	90	255	14	136	234	57
SLDM15D11R	20	60	330	385	90	255	14	136	234	67
SLDM15D13R	25	70	420	455	90	255	14	136	234	77
SLDM15D15R	32	80	520	535	90	255	14	136	234	90
SLDM15D17R	40	100	650	635	90	255	14	136	234	107
SLDM25E10R	50	125	850	446	130	335	14	168	288	120
SLDM25E12R	63	140	1050	526	130	335	14	168	288	140
SLDM25E14R	80	160	1450	606	130	335	14	168	288	163
SLDM25E15R	100	200	1550	656	130	335	14	168	288	193
SLDM25E17R	120	230	2000	776	130	335	14	168	288	227
SLDM25E19R	160	265	2600	896	130	335	14	168	288	267

Term./Bar

Curr. App.(A)	Area (mm^2)	H	Opt.
12	6	55	1
30	16	60	1
70	35	70	1
150	70	95	1
500	-	80	2.1
800	-	110	2.2
1500	-	160	2.3

Non-enclosed 3-phase inductor 8-1000 kVAr

Characteristics

Type	**SLTM...R**
Voltage	Up to 1200 V
Frequency	50-60 Hz
Temp. class	F (155°C)
Cooling method	AN
Protection index	IP 00
Ambient temp.	40°C
Applicable standards	EN 60076

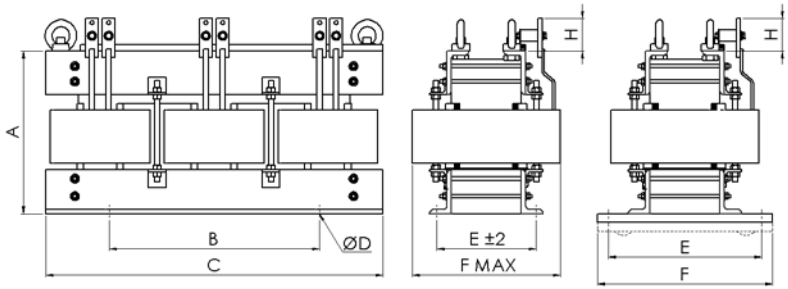

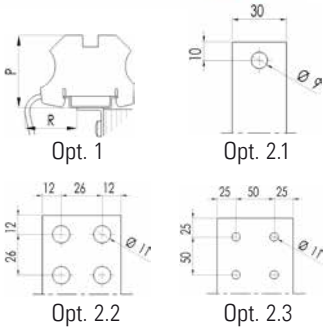

Dimensions and weights type SLTM...R

Type	kVAr	Po W	Pcu W	A	B	C	D	E	F	Kg	Fig.
SLTM4R	8	70	150	205	240	415	14	126	235	50	1
SLTM5R	10	80	160	215	240	415	14	126	235	55	1
SLTM6.3R	12.5	80	200	235	240	415	14	126	235	60	1
SLTM8R	16	90	260	265	240	415	14	126	235	70	1
SLTM10R	20	165	190	246	360	595	14	158	320	115	1
SLTM12.5R	25	180	200	266	360	595	14	158	320	130	1
SLTM16R	31.5	185	280	286	360	595	14	158	320	145	1
SLTM20R	40	220	380	306	360	595	14	178	340	170	1
SLTM25R	50	220	400	326	360	595	14	178	340	185	1
SLTM31.5R	63	230	500	356	360	595	14	178	340	210	1
SLTM40R	80	480	570	350	480	775	22	226	430	310	1
SLTM50R	100	490	780	370	480	775	22	226	430	325	1
SLTM63R	125	500	940	400	480	775	22	226	430	370	1
SLTM80R	160	660	1050	400	480	775	22	266	470	435	1
SLTM100R	200	660	1300	430	480	775	22	266	470	475	1
SLTM125R	250	760	1470	690	600	945	22	442	555	675	2
SLTM160R	315	800	1800	750	600	945	22	442	555	730	2
SLTM200R	400	840	2250	830	600	945	22	442	555	825	2
SLTM250R	500	880	2900	910	600	945	22	442	555	930	2
SLTM315R	630	1400	2800	922	700	1095	22	542	655	1240	2
SLTM400R	800	1500	3500	1032	700	1095	22	542	655	1425	2
SLTM500R	1000	1600	4500	1152	700	1095	22	542	655	1640	2

Term./Bar

Curr. App.(A)	Area (mm^2)	H	Opt.
12	6	55	1
30	16	60	1
70	35	70	1
150	70	95	1
500	-	80	2.1
800	-	110	2.2
1500	-	160	2.3

If trolley is included, dim. A should be increased with 60 mm

Non-enclosed 1-phase toroidal power transformers

Characteristics

Voltage	Up to 600 V, higher on demand
Frequency	50-60 Hz
Temp. class	class A (105°C), higher on demand
Cooling method	AN
Protection index	IP 00
Ambient temp.	40°C
Applicable standards	EN 61558
UL-recognized marking	Available on request

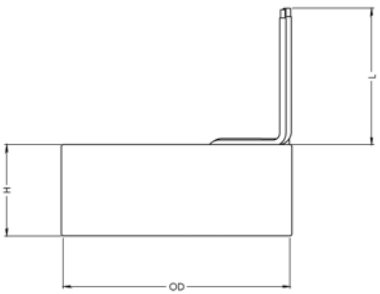

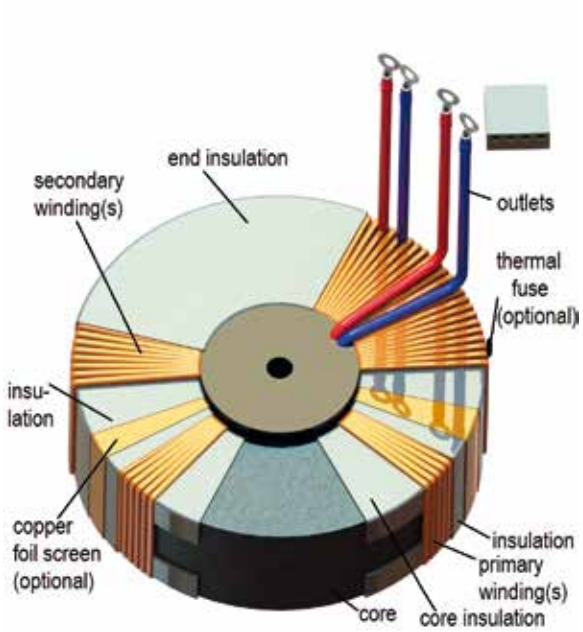

Power, dimensions and weights

VA	OD	H	Kg
15	64	33	0.3
30	76	38	0.5
50	81	36	0.7
80	99	38	1.0
120	99	48	1.3
160	114	44	1.7
225	114	51	2.2
300	117	66	2.6
400	137	51	3.0
500	137	61	3.6
625	140	81	4.3
800	163	69	5.9
990	163	76	7.2
1100	163	84	7.7
1300	203	66	9.0
1600	203	76	10.4
1900	203	87	11.7

*Other and higher powers (up to 7500VA) available on request.
Type of outlets and length L as requested.

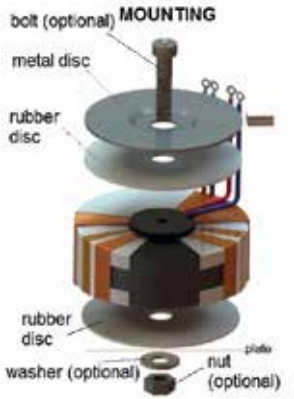

Non-enclosed 3-phase toroidal power transformers

Characteristics

Voltage	Up to 600 V
Frequency	50-60 Hz
Temp. class	A (105°C) higher on demand
Cooling method	AN
Protection index	IP 00
Ambient temp.	40°C
Applicable standards	EN 61558

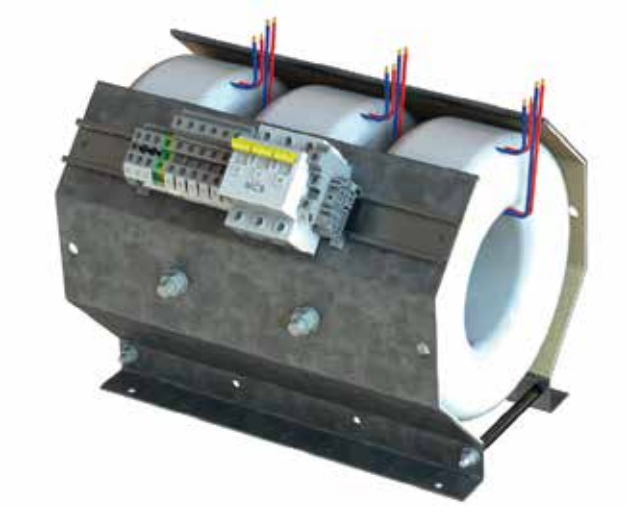

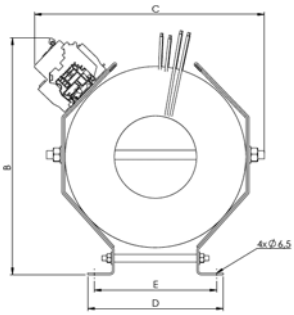

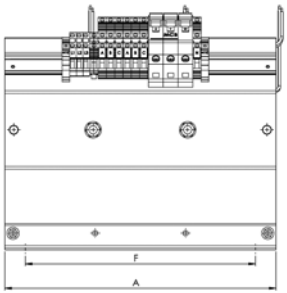

Power, dimensions and weights

3-phase input voltage V	3-phase output voltage V	Power kVA	Max. continuous load A	A	B	C	D	E	F	Kg
204 or 230	400	15	22	330	330	335	168	310	152	54
204 or 230	400	22	32	330	350	380	235	310	219	80
400	400	15	22	300	250	250	150	280	134	26
400	400	22	32	300	290	250	185	280	169	30
440 or 480	400	15	22	300	250	250	150	280	134	28
440 or 480	400	22	32	300	290	250	185	280	169	40

*Other types on request.

Quality and testing

100% electrical, mechanical and visual control is applied. Equipment to carry out tests required by IEC standard is available.
Special testing is performed in collaboration with accredited external laboratories.
Typical in-house tests:

- No load test
- Short circuit test
- Inductance measurement
- Resistance measurement
- BIL impulse test up to 100 kV
- Heat-run test
- DC measurement up to 3000A with AC superimposed current
- Dielectric test in AC up to 100 kV
- Partial discharge test
- Water leakage test

All design and manufacturing processing are certified according to the following standards:

- EN ISO 9001/2008
- IRIS
- EN 15085-2 CL1
- EN 3834-2
- EN ISO 14001

Contact us

AQ Trafo AB
Gesällgatan 15
74539 Enköping
Sweden
Phone: +46 (0) 171-236 00
Email: info.aqtrafo@aqg.se

AQ Magnit AD
21, Hristo Smirnenski, str.
2240 Godech
Bulgaria
Phone: +359 (0)729 22398
Fax: +359(0)729 22393

AQ Italy S.r.l
Via G. Sidoli 7
20129 Milano
Italy
Phone: +39 02 87213359
Fax: +39 02 87213362

AQ Magnetica S.r.l
Via Marcora 20
60022 Castelfidardo (AN)
Italy
Phone: + 39.0717823855
Fax: +39.07178240

AQ Electric Suzhou Co.,Ltd.
Suzhou New District Yangshan
Science & Technology Park
No.66 Yinyan Road
215151, Suzhou
P.R. China
Phone: +86 512 66163996
Fax: +86 512 66512292

AQ Mechanical & Electrical
Manufacturing India Pvt. Ltd.
Gat No. 343, Plot No. 54/A & 54/B,
Chakan-Talegaon Rd, Malahunge, Chakan,Taluka:
Khed, District:
410501, Pune
India
Phone: +91 9845 20 6373

Additional contact information at:
www.aqg.se

Issue: May 2017