We supply energy to the world

Catalogue 2017

AQ Magnetica s.r.l.

Index

About us 2
History 2
AQ Group in brief 2
Numbers and features 2
Development & Quality 3
Services 4
Skillness 4
Flyback 6
PFC - Flyback 7
1335 series 8
1715 series 9
1795 series 10
1802 series 11
1921 series 12
1939 series 13
2133 series 14
2198 series 15
2294 series 16
2325 series 17
LLC Resonant 18
1860 series 19
1892 series 20
2169 series 21
2204 series 22
2293 series 23
PFC Boost 24
Interleaved boost 25
Bridgeless boost 26
1056 series 27
1891 series 28
1974 series 29
1975 series 30
2083 series 31
2097 series 32
2233 series 33
2263 series 34
2292 series 35
Phase Shift 36
2006 series 37
2326 series 38
Inverter 39
2159 series 40
2162 series 41
2196 series 42
Miscellaneous 43
1226 series 44
1765 series 45
1139 series 46
1605 series 47
1045 series 48
1389 series 49
1770 series 50
1942 series 51
2019 series 52
2105 series 53
2201 series 54
2234 series 55
2258 series 56
Partners 57
Main customers 58
AQ Magnetica customers: 58
AQ Group customers: 58
Contacts 59

About us

History

Magnetica was founded in 1996, from people with great experience in the field of magnetic components and power electronic, with the purpose to find and develop best custom solution, for all kind of Enterprises/Customers in the field of: Electromagnetic Components (Design & Production) and Switching Mode Power Supplies (Design & Demo board).
In 2016 became part of AQ Group switching his name in AQ Magnetica s.r.l.

AQ Group in brief

AQ is a leading supplier to demanding industrial customers and is listed on AktieTorget since year 2001.
The Group consists of operating companies each of which develop their special skills, and in cooperation with other companies, striving to provide cost effective solutions in close cooperation with the customer.
The Group operates in two business segments: **Components**, which produces transformers, wiring systems, mechanical components, punched sheet metal and injection-moulded thermoplastics and **System**, which produces systems, power and automation solutions and assembles complete machines
in close collaboration with the customers.
The AQ Group headquarter is located in Västerås, Sweden.
AQ has the highest credit rating, AAA.

Numbers and features

- 5 production plant:
  - Castelfidardo - Italy
  - Godech – Bulgaria
  - Sremska Mitrovica – Serbia
  - Pune – India
  - Suzhou – China
- Staff:
  - 5163 at 31TH of December 2016 in AQ Group
  - About 700 people in the Business Area Inductive Components
- Turnover:
  - 290 M€ in 2015 and 320 M€ in 2016 on the entire group
  - 26/28 M€ from Business Area Inductive Components
- Technical staff:
  - 3 people in Sweden
  - 6 people in Italy
  - 7 production engineers in Bulgaria
  - 3 production engineers in India
  - 4 production engineers in China
- Products application:
  - Consumer electronics
  - Power electronics
  - Electric drivers for auxiliary parts in tram and trains
  - Telecommunications
  - Robots
  - UPS

Development & Quality

AQ Magnetica stands out for the **constant research and innovation**, for the efficient internal management and for the high quality of the provided products and services, focused on customers need.

In 2008 was certificate in **ISO 9001:2008** compliant with his principles:

- **Customer focus:** Organizations depend on their customers and therefore should understand current and future customer needs, should meet customer requirements and strive to exceed customer expectations.
- **Leadership:** Leaders establish unity of purpose and direction of the organization. They should create and maintain the internal environment in which people can become fully involved in achieving the organization's objectives.
- **Engagement of people:** People at all levels are the essence of an organization and their full involvement enables their abilities to be used for the organization's benefit.
- **Process approach:** A desired result is achieved more efficiently when activities and related resources are managed as a process.
- **Improvement:** Improvement of the organization's overall performance should be a permanent objective of the organization.
- **Evidence-based decision making:** Effective decisions are based on the analysis of data and information.
- **Relationship management:** An organization and its external providers (suppliers, contractors, service providers) are interdependent and a mutually beneficial relationship enhances the ability of both to create value.

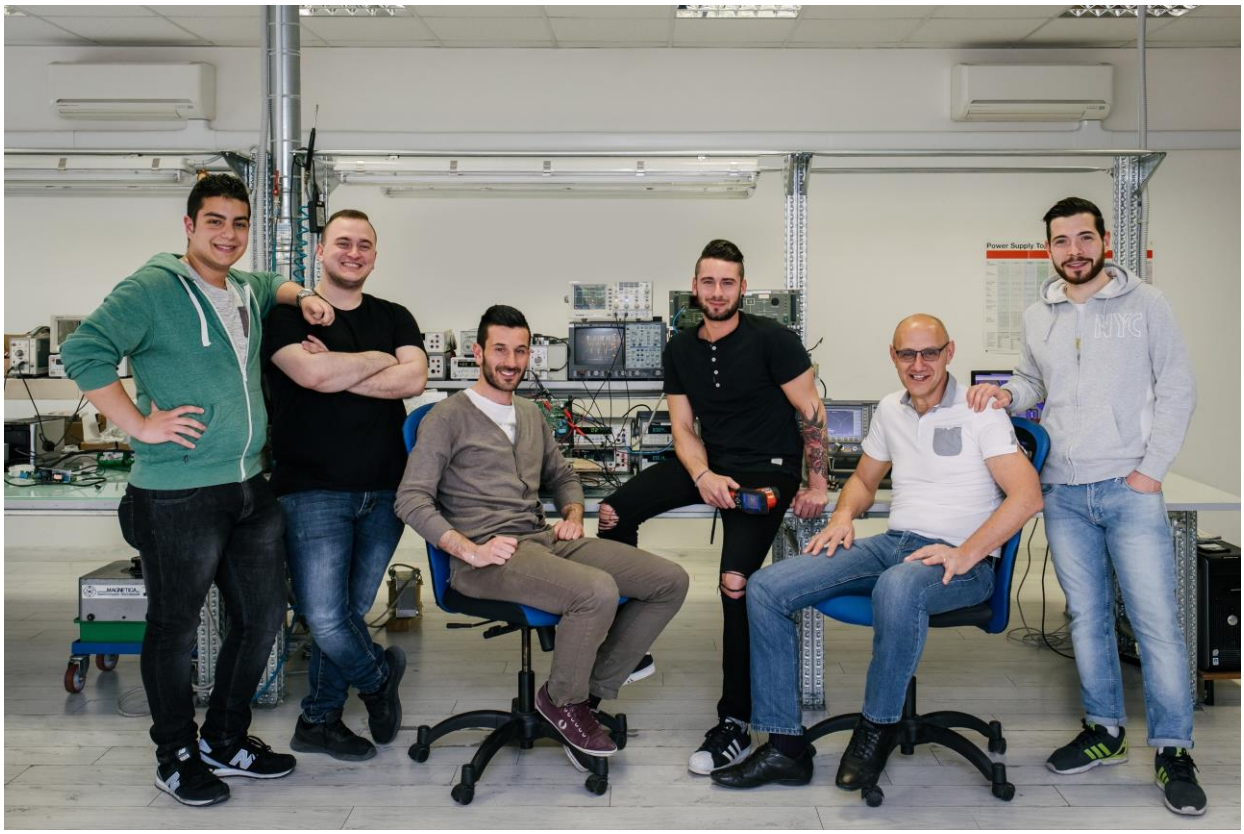

UNI EN ISO 9001:2008
9101.MAGT

WE ARE RELIABLE

Services

The outcome of this long-term cooperative strategy (with such worldwide actors) is a professional, skilled and well experienced technical staff able to support every customer through a "step by step" approach.
From the first contact till the final approval of component / power supply prototyping stage.
Nowadays, even if the “core business” remains the electromagnetic components engineering and production, AQ Magnetica is now focused on being the engineering partner of our main customers in the design of switch mode power supplies.
AQ Magnetica’s R&D services are:

- Complete Power Supply design and development for many types of applications (HID and LED lighting, Automotive, Home and Industrial Automation, Battery chargers, Electro-medical, Solar inverter and many others)
- Customized electromagnetic products engineering with samples delivery
- Debug and diagnostic analysis on power supply
- Laboratory testing activities (EMC and pre-compliance, thermographs scanning, etc.)
- Full compliance in cooperation with external IMQ laboratory

Skillness

- Design Expertise: Software; Hardware; EMI.
- MCU / PIC Specialty: 8 bit; 16 bit; 32 bit; DSC; DSP;
- Analog Specialty: Magnetic components; Power design; Mixed Signal.
- Connectivity and Networking: CAN; LIN; USB; Ethernet; RF; ZigBee; Infrared;
- Market Segment Specialty: Automotive; Consumer; Home Appliances; Industrial; Medical; Telecom; Utility metering.
- Application Specialty: Design custom support in Power and EMI.
- Home and Building Automation: Security Systems; Fire Alarm Systems; Lighting Control; HVAC Control.
- Lighting: Fluorescent; LCD; Power LED; HID.
- Power Supplies: Analog; Digital.
- Other Capabilities: Audio and Speech; Battery Management; Sensors.

Spice Simulation

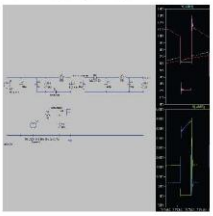

Thermal Simulation

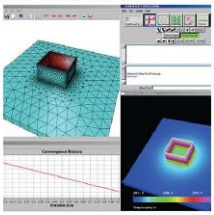

PCB Design

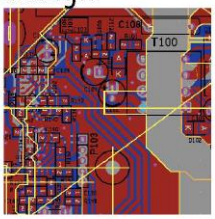

Thermal Measure

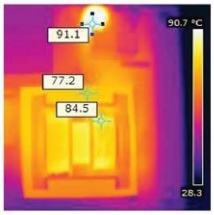

EMI Measure

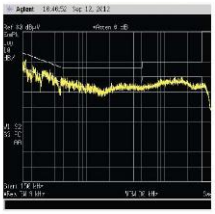

3D Design

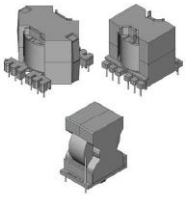

Applications

Flyback

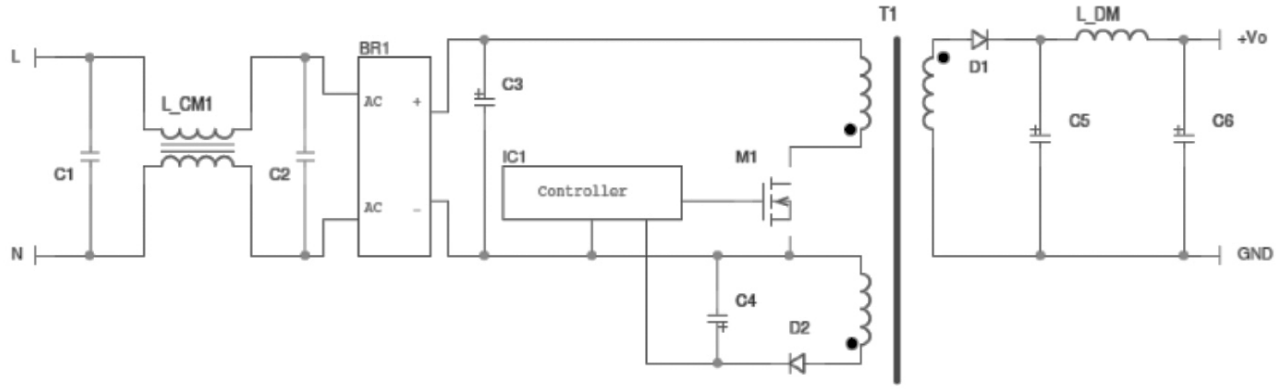

Main benefits:

- Lowest component count among isolated topologies
- Low cost
- Simple design and short time to market
- Huge offer of controllers and switches
- Different flavors to suit specific applications

Applications

- Low power, high integration battery chargers
- Auxiliary & industrial power supply
- Adapters
- Offline LED drivers

AQ Magnetica's added value

- Output levels from 1W to 300W wide-range in single stage design
- Up to 5000Vrms primary-to-secondary insulation
- Both high efficiency @full load and low consumption @no-load thanks by in-house transformer design &manufacturing
- Broad experience with controllers from the different semiconductor manufacturers
- Recognized supplier for ST Microelectronics evaluation boards

PFC - Flyback

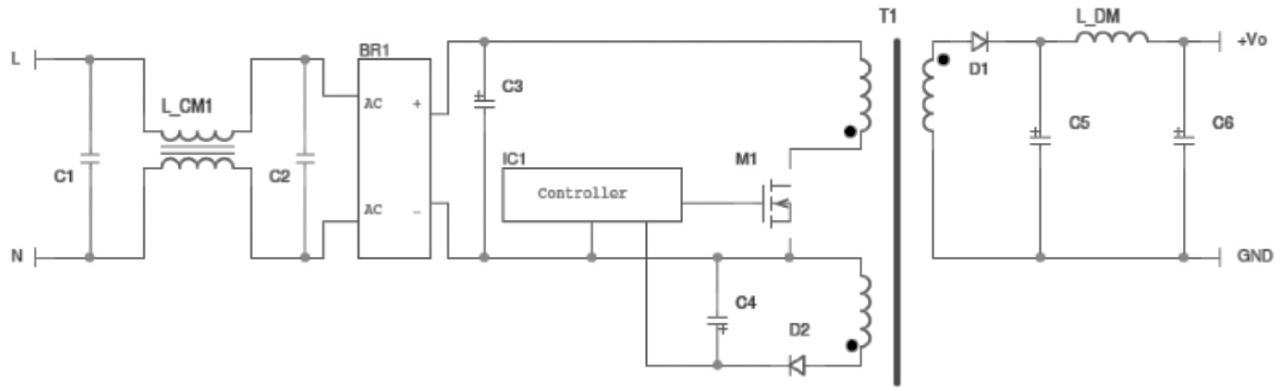

Main benefits

- PFC preregulator and DC/DC converter integrated in a
- single stage
- Lower cost when compared to the sum of a PFC +
- DC/DC converter
- Simple design and high compactness achievable
- May use the same controller families of corresponding
- boost PFC preregulator
- Insulated design typical of a conventional flyback topology

Applications

- High-end residential battery chargers
- Adapters
- Offline LED drivers

AQ Magnetica's added value

- Output levels from 10W to 100W wide-range in single stage design
- Up to 5000Vrms primary-to-secondary insulation
- Both high efficiency @full load and low consumption @no-load thanks to in-house transformer design & manufacturing
- Broad experience with controllers from the different semiconductor manufacturers
- Recognized supplier for ST Microelectronics evaluation boards

1335 series

Flyback Switch Mode Transformer
Up to 9W
Core size: E16/5

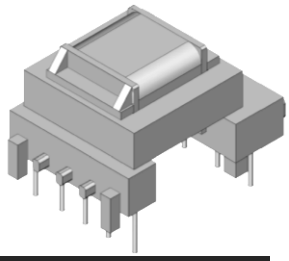

MAIN FEATURES

- ✓ AVAILABLE IN FIXED FREQUENCY OR QUASI RESONANT MODE
- ✓ REINFORCED INSULATION CLASS II (4KV)
- ✓ CLASS "B" INSULATION SYSTEM RECOGNIZED
- ✓ ACCORDING TO UL94-V0 LISTED MATERIALS
- ✓ ACCORDING TO EN 61558-2-16
- ✓ COMPATIBLE WITH:

  STM: VIPERXX, L6565, L6562, ALTAIR05T-800
  FAIRCHILD: FSQXX, FANXX, FSLXX
  TEXAS: **UCC**XX
  POWER INTEGRATIONS: LNKXX, TOPXX, TNYXX
  INFINEON: **ICE**XX

DISTINGUISHINGING FEATURES

- ✓ OFFICIAL TRANSFORMER FOR:
  - **EVLALTAIR05T**
  - **STEVAL-ISA118V1**
  - **STEVAL-ISV002V2**
  - **STEVALVIP15L-6W**
- ✓ AVAILABLE IN CLASS "F" INSULATION SYSTEM RECOGNIZED
- ✓ FULLY CUSTOMIZABLE
- ✓ 3D STEP FILE AVAILABLE

ELECTRICAL CHARACTERISTICS

VOLTAGE INPUT	120-400	VDC
VOLTAGE OUTPUT	5-48	VDC
WORKING FREQUENCY	50-200	KHZ
MAX OUTPUT POWER	9	W
EFFICIENCY	≥ 80	%
WEIGHT	10	g
STORAGE CONDITIONS (RH ≤ 75%)	-20 ÷ +85	°C

DE-RATING POWER VS T_A

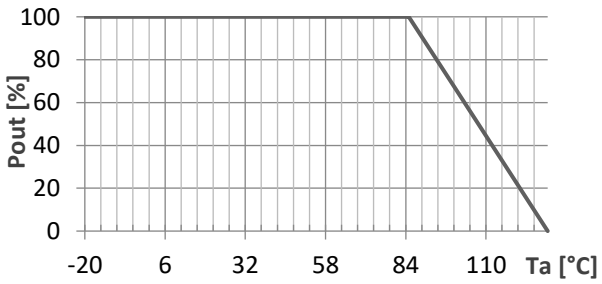

PHYSICAL PARAMETERS

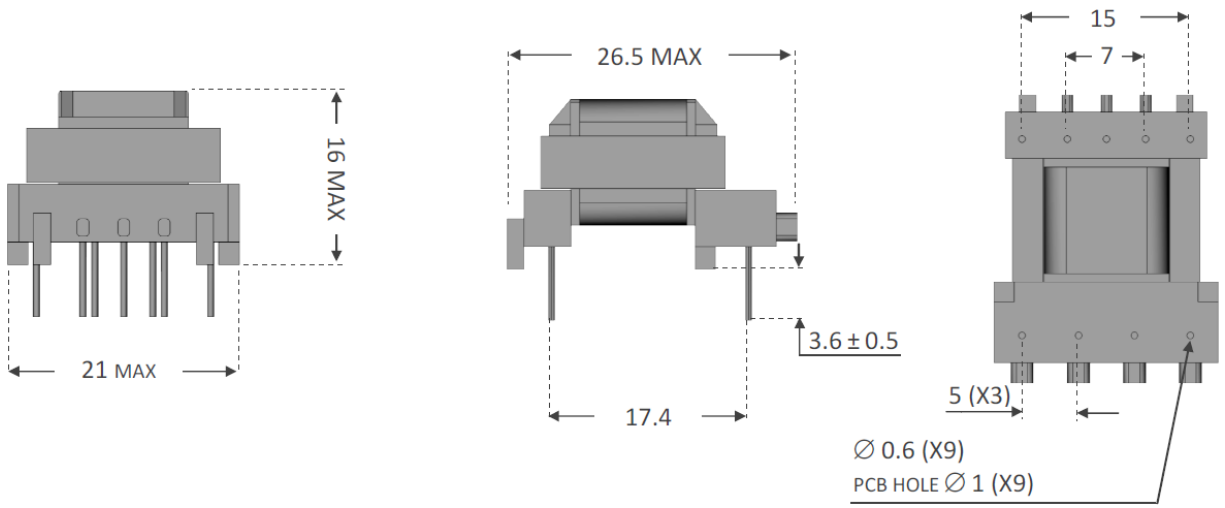

RoHS Compliant

1715 series

Flyback Switch Mode Transformer
Up to 20W
Core size E20/6

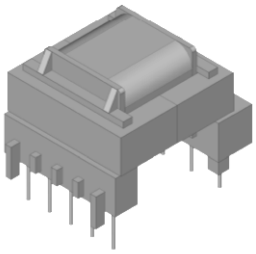

MAIN FEATURES

- ✓ AVAILABLE IN FIXED FREQUENCY OR QUASI RESONANT MODE
- ✓ REINFORCED INSULATION CLASS II (4KV)
- ✓ CLASS "B" INSULATION SYSTEM RECOGNIZED
- ✓ ACCORDING TO UL94-V0 LISTED MATERIALS
- ✓ ACCORDING TO EN 61558-2-16
- ✓ COMPATIBLE WITH:

  STM: VIPERxx, L6565, L6562, ALTAIR05T-800
  FAIRCHILD: FSQxx, FANxx, FSLxx
  TEXAS: UCCxx
  POWER INTEGRATIONS: LNKxx, TOPxx, TNYxx
  INFINEON: ICExx

DISTINGUISHINGING FEATURES

- ✓ OFFICIAL TRANSFORMER FOR:
  - **EVALVIPER17L**
  - **EVLVIP37LE5V3A**
  - **EVLVIP26L-12WFN**
  - **EVL185W-LEDTV**
  - **EVL170W-FTV**
- ✓ AVAILABLE IN CLASS "F" INSULATION SYSTEM RECOGNIZED
- ✓ FULLY CUSTOMIZABLE
- ✓ 3D STEP FILE AVAILABLE

ELECTRICAL CHARACTERISTICS

VOLTAGE INPUT	120-400	VDC
VOLTAGE OUTPUT	5-48	VDC
WORKING FREQUENCY	50-200	KHZ
MAX OUTPUT POWER	20	W
EFFICIENCY	≥ 80	%
WEIGHT	20	G
STORAGE CONDITIONS (RH ≤ 75%)	-20 ÷ +85	°C

DE-RATING POWER VS T_A

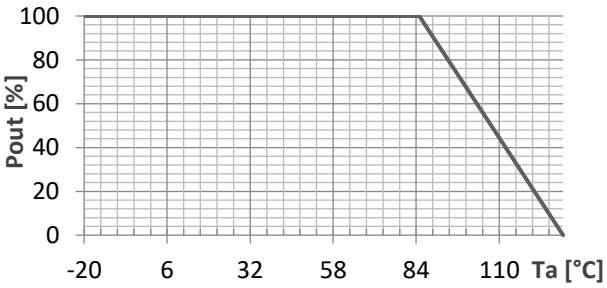

PHYSICAL PARAMETERS

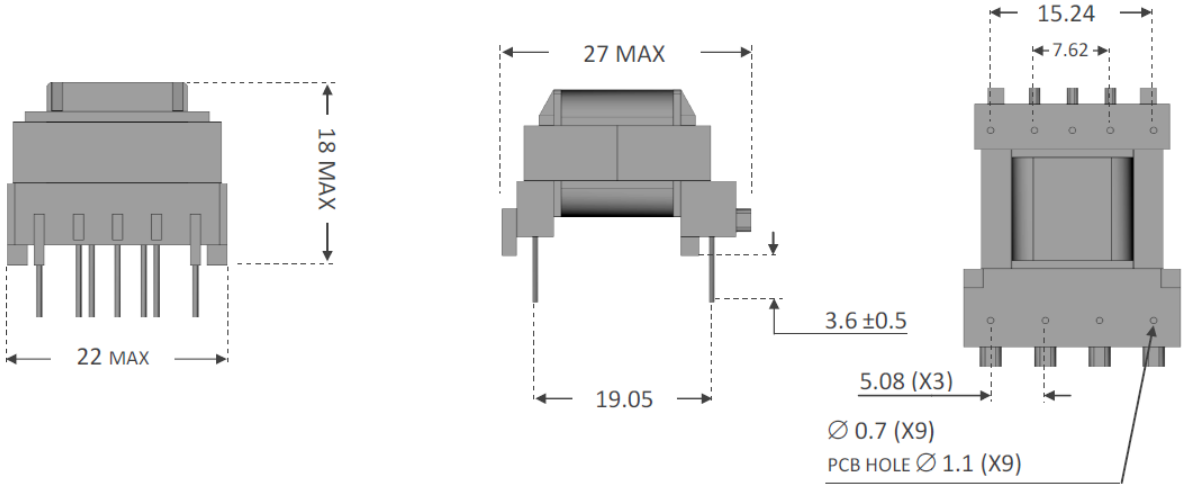

RoHS Compliant

1795 series

Flyback Switch Mode Transformer
Up to 40W
Core size E25/13/7

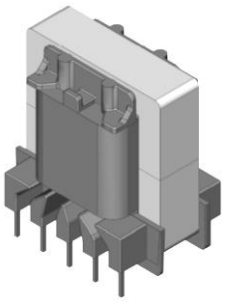

MAIN FEATURES

- ✓ AVAILABLE IN FIXED FREQUENCY OR QUASI RESONANT MODE
- ✓ REINFORCED INSULATION CLASS II (4KV)
- ✓ CLASS "B" INSULATION SYSTEM RECOGNIZED
- ✓ ACCORDING TO UL94-V0 LISTED MATERIALS
- ✓ ACCORDING TO EN 61558-2-16
- ✓ COMPATIBLE WITH:

STM: VIPERxx, L6565, L6562, ALTAIR05T-800
FAIRCHILD: FSQxx, FANxx, FSLxx
TEXAS: UCCxx
POWER INTEGRATIONS: LNKxx, TOPxx, TNYxx
INFINEON: ICExx

DISTINGUISHINGING FEATURES

- ✓ TRANSFORMER FOR LED DRIVER APPLICATIONS
- ✓ AVAILABLE IN CLASS "F" INSULATION SYSTEM RECOGNIZED
- ✓ AVAILABLE WITH EXTERNAL SHIELD FOR EMI REQUIREMENTS
- ✓ FULLY CUSTOMIZABLE
- ✓ 3D STEP FILE AVAILABLE

ELECTRICAL CHARACTERISTICS

VOLTAGE INPUT	120-400	VDC
VOLTAGE OUTPUT	5-50	VDC
WORKING FREQUENCY	50-200	KHZ
MAX OUTPUT POWER (EU RANGE)	40	W
EFFICIENCY	≥ 80	%
WEIGHT	30	g
STORAGE CONDITIONS (RH ≤ 75%)	-20 ÷ +85	°C

DE-RATING POWER VS T_A

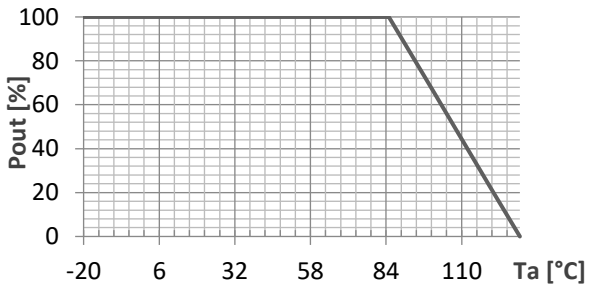

PHYSICAL PARAMETERS

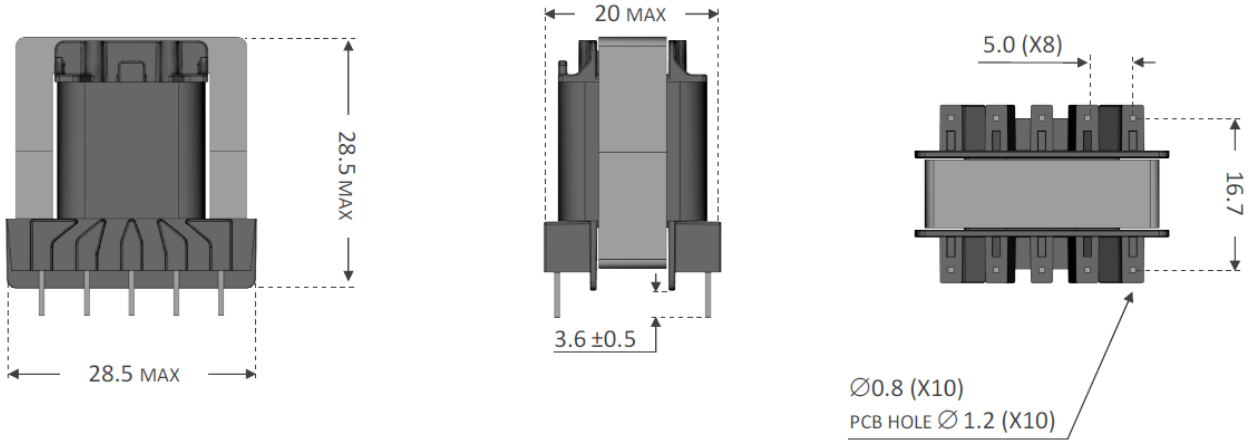

RoHS Compliant

1802 series

Flyback Switch Mode Transformer
Up to 5W
Core size E13/4

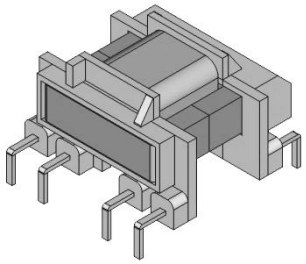

MAIN FEATURES

- ✓ SMALLEST FOOTPRINT
- ✓ REINFORCED INSULATION CLASS II (4KV)
- ✓ CLASS "B" INSULATION SYSTEM RECOGNIZED
- ✓ ACCORDING TO UL94-V0 LISTED MATERIALS
- ✓ ACCORDING TO EN 61558-2-16
- ✓ COMPATIBLE WITH:

STM: ALTAIR05-800, HVLED805, VIPER17HN
FAIRCHILD: FSQXX, FANXX, FSLXX
TEXAS: UCCXX
POWER INTEGRATIONS: LNKXX, TOPXX, TNYXX
INFINEON: ICEXX

DISTINGUISHING FEATURES

- ✓ OFFICIAL TRANSFORMER FOR:
  EVLVIP17-5WCHG
- ✓ LOW PROFILE
- ✓ AVAILABLE IN CLASS "F" INSULATION SYSTEM RECOGNIZED
- ✓ FULLY CUSTOMIZABLE
- ✓ 3D STEP FILE AVAILABLE

ELECTRICAL CHARACTERISTICS

VOLTAGE INPUT	120-400	VDC
VOLTAGE OUTPUT	5-30	VDC
WORKING FREQUENCY	50-200	KHZ
MAX OUTPUT POWER	5	W
EFFICIENCY	≥ 80	%
WEIGHT	2	g
STORAGE CONDITIONS (RH ≤ 75%)	-20 ÷ +85	°C

DE-RATING POWER VS T_A

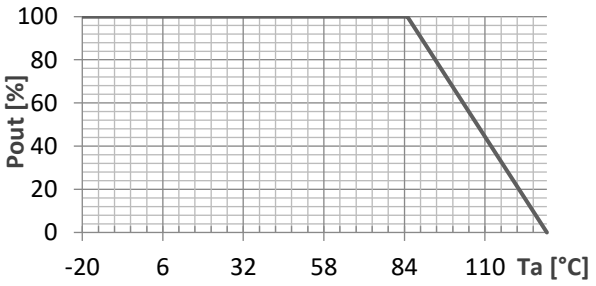

PHYSICAL PARAMETERS

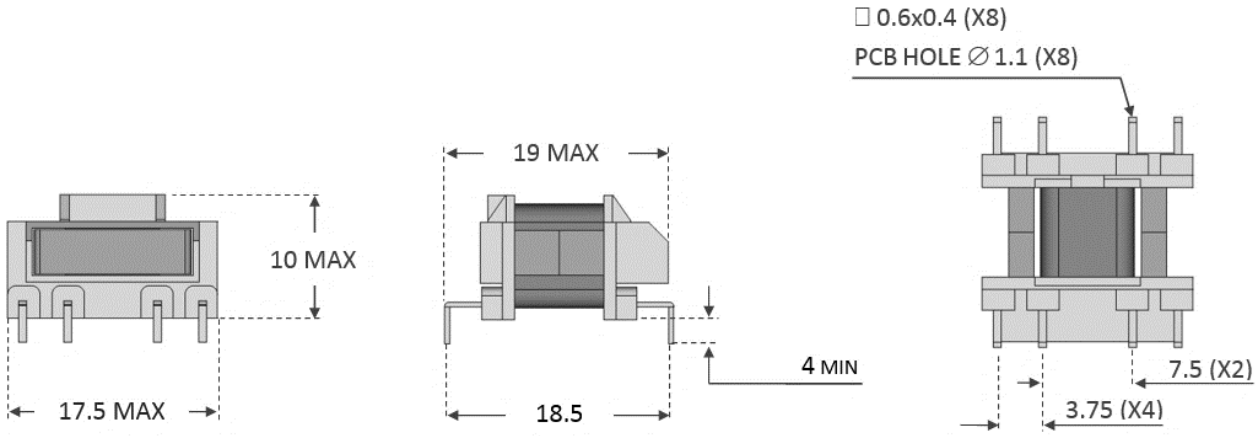

RoHS Compliant

1921 series

Flyback Switch Mode Transformer
Up to 5W
Core size E13/4

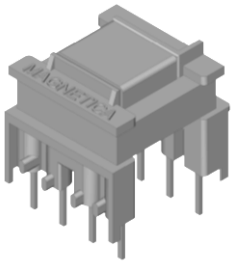

MAIN FEATURES

- ✓ SMALLEST FOOTPRINT
- ✓ REINFORCED INSULATION CLASS II (4KV)
- ✓ CLASS "B" INSULATION SYSTEM RECOGNIZED
- ✓ ACCORDING TO UL94-V0 LISTED MATERIALS
- ✓ ACCORDING TO EN 61558-2-16
- ✓ COMPATIBLE WITH:

STM: ALTAIR05-800, HVLED805, VIPER17HN
FAIRCHILD: FSQXX, FANXX, FSLXX
TEXAS: UCCXX
POWER INTEGRATIONS: LNKXX, TOPXX, TNYXX
INFINEON: ICEXX

DISTINGUISHING FEATURES

- ✓ OFFICIAL TRANSFORMER FOR:
  - **EVALHVLED805**
  - **STEVAL-IHP002V2**
  - **STEVAL-ISA113V1**
- ✓ SMALLEST FOOTPRINT
- ✓ AVAILABLE IN CLASS "F" INSULATION SYSTEM RECOGNIZED
- ✓ FULLY CUSTOMIZABLE
- ✓ 3D STEP FILE AVAILABLE

ELECTRICAL CHARACTERISTICS

VOLTAGE INPUT	120-400	VDC
VOLTAGE OUTPUT	5-30	VDC
WORKING FREQUENCY	50-200	KHZ
MAX OUTPUT POWER	5	W
EFFICIENCY	≥ 80	%
WEIGHT	2	g
STORAGE CONDITIONS (RH ≤ 75%)	-20 ÷ +85	°C

DE-RATING POWER VS T_A

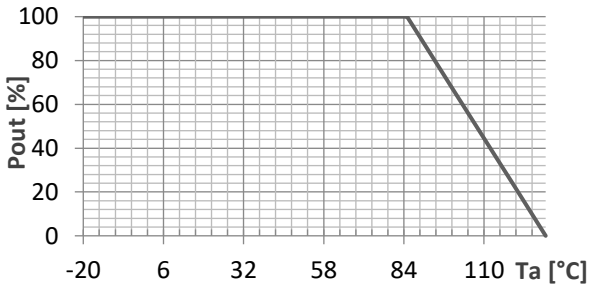

PHYSICAL PARAMETERS

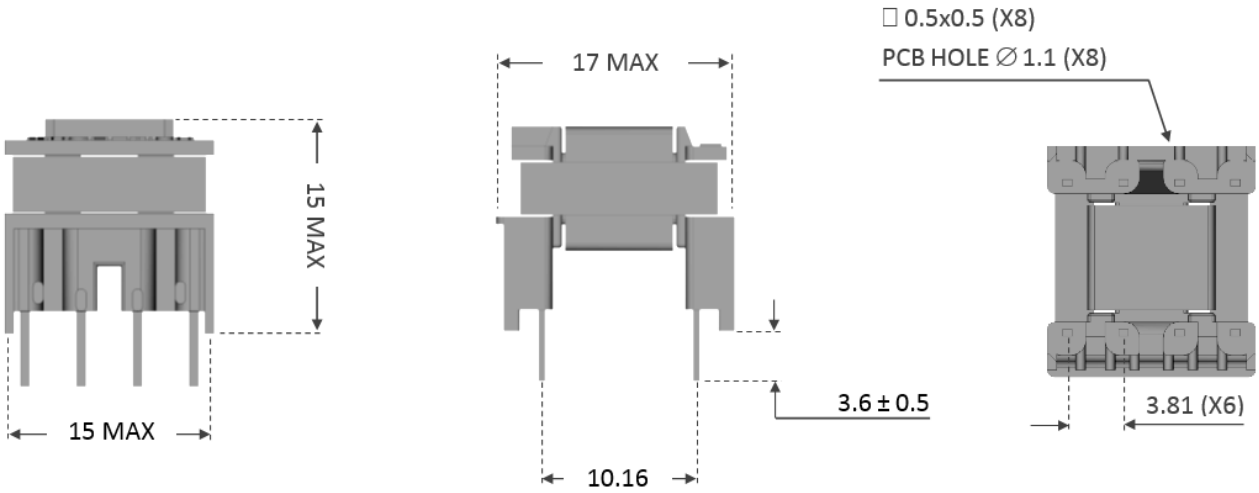

RoHS Compliant

1939 series

Flyback Switch Mode Transformer
Up to 80W
Core size E25/13/11

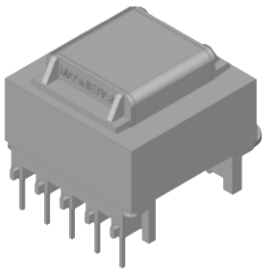

MAIN FEATURES

- ✓ AVAILABLE IN FIXED FREQUENCY OR QUASI RESONANT MODE
- ✓ REINFORCED INSULATION CLASS II (4KV)
- ✓ CLASS "B" INSULATION SYSTEM RECOGNIZED
- ✓ ACCORDING TO UL94-V0 LISTED MATERIALS
- ✓ ACCORDING TO EN 61558-2-16
- ✓ COMPATIBLE WITH:

  STM: VIPERxx, L6565, L6562, ALTAIR05T-800
  FAIRCHILD: FSQxx, FANxx, FSLxx
  TEXAS: UCCxx
  POWER INTEGRATIONS: LNKxx, TOPxx, TNYxx
  INFINEON: ICExx

DISTINGUISHING FEATURES

- ✓ OFFICIAL TRANSFORMER FOR LED DRIVER APPLICATIONS:
  - **1736.0010 - 50W 50V PFC LED DRIVER - EURO**
  - **1736.0021 - 24W 24V PFC LED DTIVER - WIDE**
  - **1736.0022 - 24W 12V PFC LED DRIVER - WIDE**
  - **1736.0024 - 35W 48V PFC LED DRIVER - WIDE**
  - **1736.0025 - 17W 48V PFC LED DRIVER - WIDE**
  - **1736.0030 - 70W 48V PFC LED DRIVER - EURO**
- ✓ AVAILABLE WITH EXTERNAL SHIELD FOR THE EMI REQUIREMENTS
- ✓ AVAILABLE IN CLASS "F" INSULATION SYSTEM RECOGNIZED
- ✓ FULLY CUSTOMIZABLE
- ✓ 3D STEP FILE AVAILABLE

ELECTRICAL CHARACTERISTICS

VOLTAGE INPUT	120-400	VDC
VOLTAGE OUTPUT	5-50	VDC
WORKING FREQUENCY	50-200	KHZ
MAX OUTPUT POWER	80	W
EFFICIENCY	≥ 80	%
WEIGHT	40	g
STORAGE CONDITIONS (RH ≤ 75%)	-20 ÷ +85	°C

DE-RATING POWER VS T_A

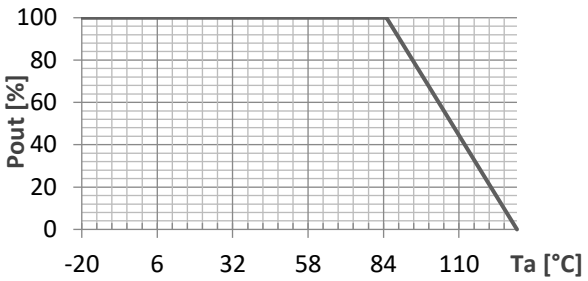

PHYSICAL PARAMETERS

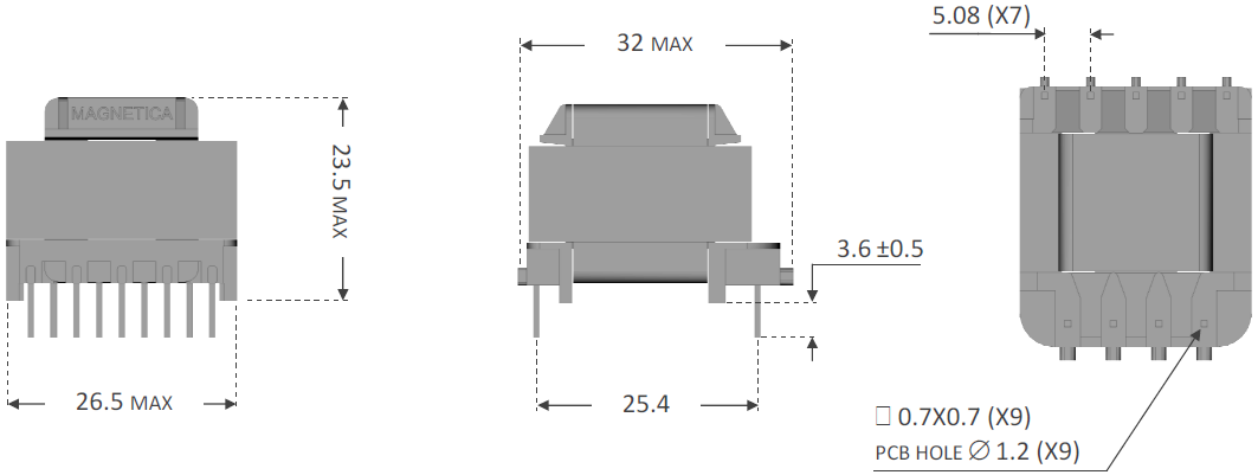

RoHS Compliant

2133 series

Flyback Switch Mode Transformer
Up to 20W
Core size E20/6

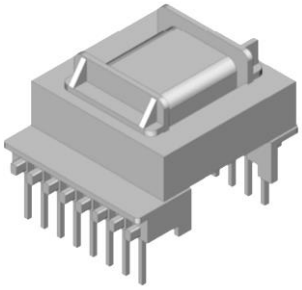

MAIN FEATURES

- ✓ AVAILABLE IN FIXED FREQUENCY OR QUASI RESONANT MODE
- ✓ REINFORCED INSULATION CLASS II (4KV)
- ✓ CLASS "B" INSULATION SYSTEM RECOGNIZED
- ✓ ACCORDING TO UL94-V0 LISTED MATERIALS
- ✓ ACCORDING TO EN 61558-2-16
- ✓ COMPATIBLE WITH:

  STM: VIPERxx, L6565, L6562, ALTAIR05T-800
  FAIRCHILD: FSQxx, FANxx, FSLxx
  TEXAS: **UCC**xx
  POWER INTEGRATIONS: LNKxx, TOPxx, TNYxx
  INFINEON: **ICE**xx

DISTINGUISHING FEATURES

- ✓ AVAILABLE TRANSFORMER FOR:
  - **EVALVIPER17L**
  - **EVLVIP37LE5V3A**
  - **EVLVIP26L-12WFN**
  - **EVL185W-LEDTV**
  - **EVL170W-FTV**
- ✓ LOW PROFILE MULTIPIN
- ✓ AVAILABLE IN CLASS "F" INSULATION SYSTEM RECOGNIZED
- ✓ FULLY CUSTOMIZABLE
- ✓ 3D STEP FILE AVAILABLE

ELECTRICAL CHARACTERISTICS

VOLTAGE INPUT	120-400	VDC
VOLTAGE OUTPUT	5-48	VDC
WORKING FREQUENCY	50-200	KHZ
MAX OUTPUT POWER	20	W
EFFICIENCY	≥ 80	%
WEIGHT	20	g
STORAGE CONDITIONS (RH ≤ 75%)	-20 ÷ +85	°C

DE-RATING POWER VS T_A

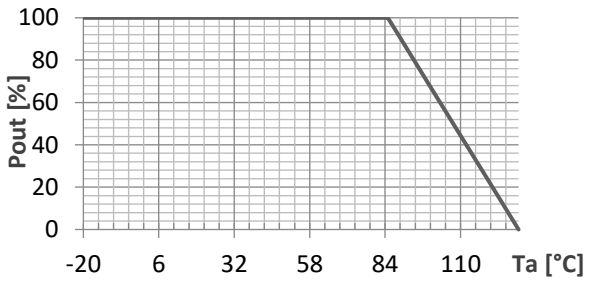

PHYSICAL PARAMETERS

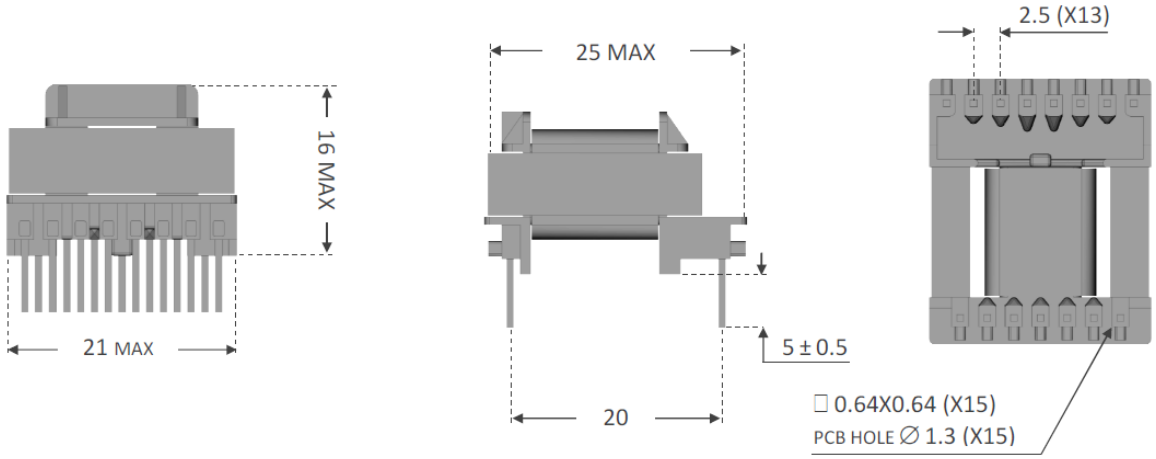

RoHS Compliant

2198 series

Flyback Switch Mode Transformer
Up to 9W
Core size E16/4.8

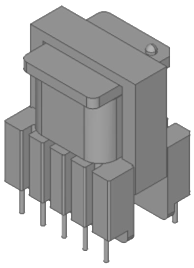

MAIN FEATURES

- ✓ AVAILABLE IN FIXED FREQUENCY OR QUASI RESONANT MODE
- ✓ REINFORCED INSULATION CLASS II (4KV)
- ✓ CLASS "B" INSULATION SYSTEM RECOGNIZED
- ✓ ACCORDING TO UL94-V0 LISTED MATERIALS
- ✓ ACCORDING TO EN 61558-2-16
- ✓ COMPATIBLE WITH:

  STM: VIPERxx, L6565, L6562, ALTAIR05T-800
  FAIRCHILD: FSQxx, FANxx, FSLxx
  TEXAS: UCCxx
  POWER INTEGRATIONS: LNKxx, TOPxx, TNYxx
  INFINEON: ICExx

DISTINGUISHING FEATURES

- ✓ OFFICIAL TRANSFORMER FOR:
  - STEVAL-ILH007V1
  - STEVAL-ILL043V1
  - STEVAL-ISA133V1
- ✓ AVAILABLE IN CLASS "F" INSULATION SYSTEM RECOGNIZED
- ✓ FULLY CUSTOMIZABLE
- ✓ 3D STEP FILE AVAILABLE

ELECTRICAL CHARACTERISTICS

VOLTAGE INPUT	120-400	VDC
VOLTAGE OUTPUT	5-48	VDC
WORKING FREQUENCY	50-200	KHZ
MAX OUTPUT POWER	9	W
EFFICIENCY	≥ 80	%
WEIGHT	10	g
STORAGE CONDITIONS (RH ≤ 75%)	-20 ÷ +85	°C

DE-RATING POWER VS T_A

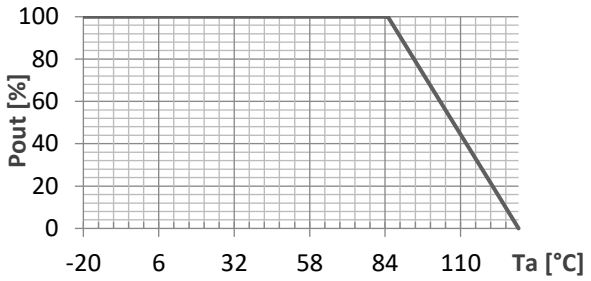

PHYSICAL PARAMETERS

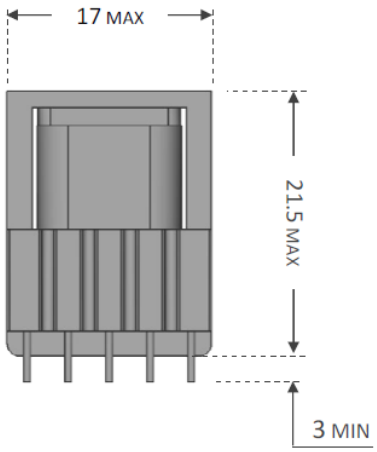

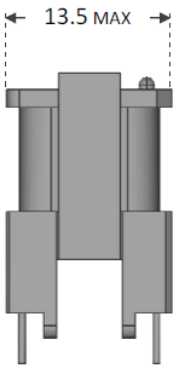

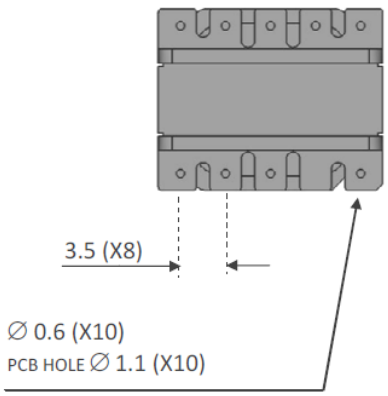

RoHS Compliant

2294 series

Flyback Switch Mode Transformer
Up to 90W
Core size E22E

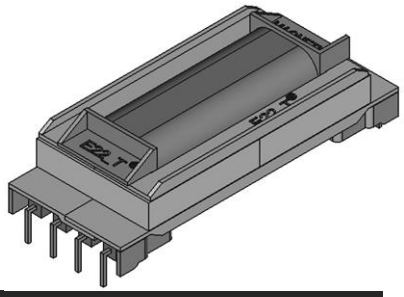

MAIN FEATURES

- ✓ AVAILABLE IN FIXED FREQUENCY OR QUASI RESONANT MODE
- ✓ REINFORCED INSULATION CLASS II (4KV)
- ✓ CLASS "B" INSULATION SYSTEM RECOGNIZED
- ✓ ACCORDING TO UL94-V0 LISTED MATERIALS
- ✓ ACCORDING TO EN 61558-2-16
- ✓ COMPATIBLE WITH:

  STM: HVLED001, L6565, L6562, ALTAIR05T-800
  FAIRCHILD: FSQXX, FANXX, FSLXX
  TEXAS: UCCXX
  POWER INTEGRATIONS: LNKXX, TOPXX, TNYXX

DISTINGUISHING FEATURES

- ✓ SUITABLE FOR REPLACEMENT OF T8 NEON TUBES WITH LEDS, LOW PROFILE COMPONENT
- ✓ AVAILABLE WITH LOW PARASITIC CAPACITANCE
- ✓ AVAILABLE WITH AUXILIARY WINDING FOR THE SUPPLY VOLTAGE
- ✓ AVAILABLE IN "F" CLASS INSULATION SYSTEM RECOGNIZED
- ✓ AVAILABLE WITH EXTERNAL SHIELD FOR THE EMI REQUIREMENTS
- ✓ FULLY CUSTOMIZABLE
- ✓ 3D STEP FILE AVAILABLE

ELECTRICAL CHARACTERISTICS

VOLTAGE INPUT	85-305	VAC
VOLTAGE OUTPUT	24-120	VDC
WORKING FREQUENCY	50-200	KHZ
MAX OUTPUT POWER (EU RANGE)	90	W
MAX OUTPUT POWER (WIDE RANGE)	40	W
EFFICIENCY	≥ 95	%
WEIGHT	30	g
STORAGE CONDITIONS (RH ≤ 75%)	-20 ÷ +85	°C

DE-RATING POWER VS T_A

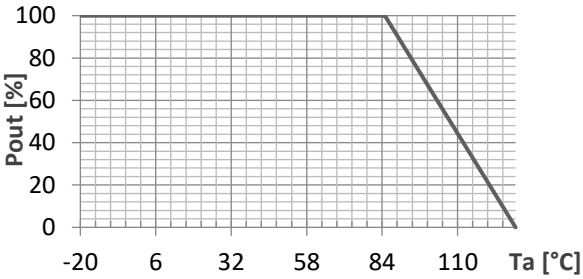

PHYSICAL PARAMETERS

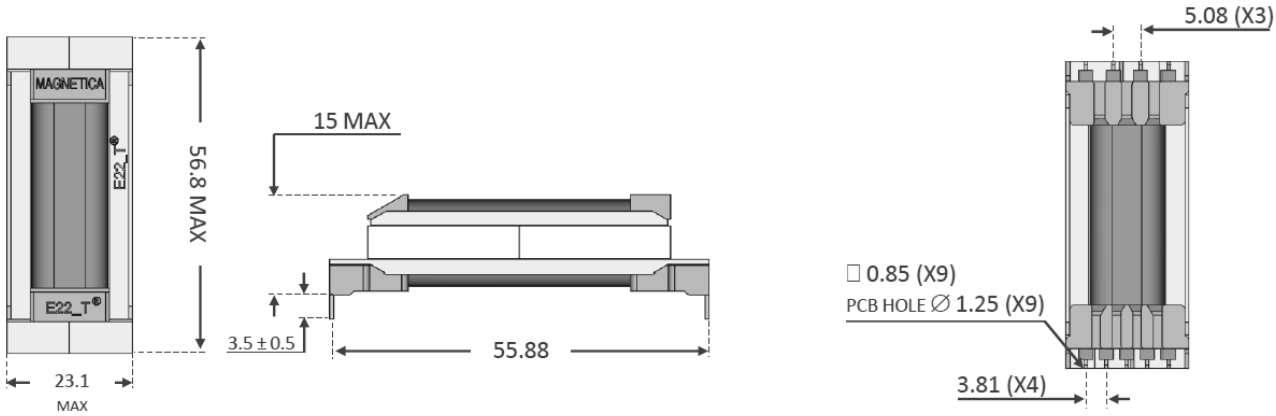

RoHS Compliant

2325 series

Flyback Switch Mode Transformer
Up to 6W
Core size EFD15/8/5

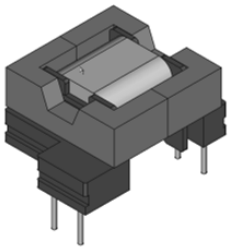

MAIN FEATURES

- ✓ AVAILABLE IN FIXED FREQUENCY OR QUASI RESONANT MODE
- ✓ REINFORCED INSULATION CLASS II (4KV)
- ✓ CLASS "B" INSULATION SYSTEM RECOGNIZED
- ✓ ACCORDING TO UL94-V0 LISTED MATERIALS
- ✓ ACCORDING TO EN 61558-2-16
- ✓ COMPATIBLE WITH:

STM: VIPERxx, L6565, L6562, ALTAIR05T-800
FAIRCHILD: FSQxx, FANxx, FSLxx
TEXAS: UCCxx
POWER INTEGRATIONS: LNKxx, TOPxx, TNYxx
INFINEON: ICExx

DISTINGUISHING FEATURES

- ✓ AVAILABLE IN CLASS "F" INSULATION SYSTEM RECOGNIZED
- ✓ FULLY CUSTOMIZABLE
- ✓ 3D STEP FILE AVAILABLE

ELECTRICAL CHARACTERISTICS

VOLTAGE INPUT	120-400	VDC
VOLTAGE OUTPUT	5-48	VDC
WORKING FREQUENCY	50-200	KHZ
MAX OUTPUT POWER	6	W
EFFICIENCY	≥ 80	%
WEIGHT	5	g
STORAGE CONDITIONS (RH ≤ 75%)	-20 ÷ +85	°C

DE-RATING POWER VS T_A

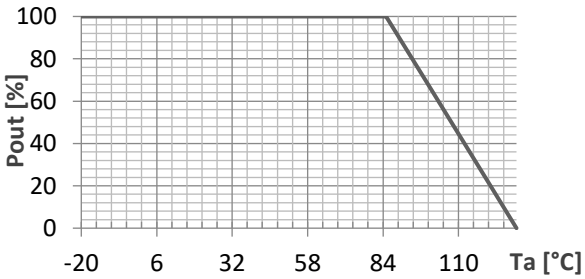

PHYSICAL PARAMETERS

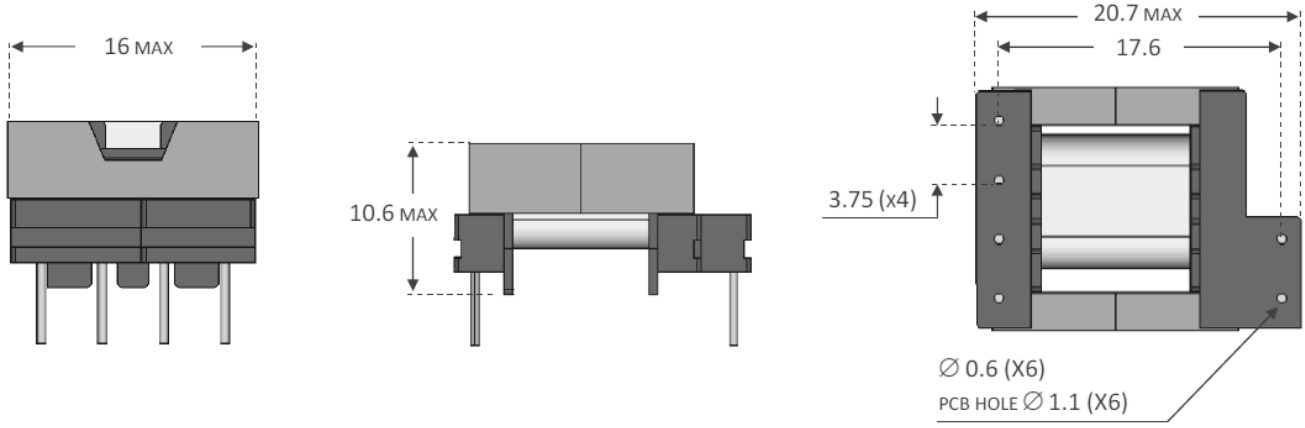

RoHS Compliant

LLC Resonant

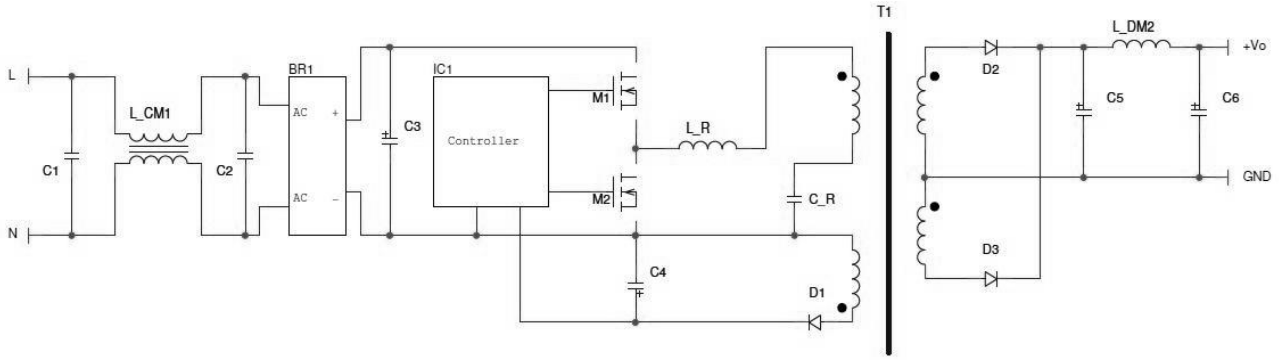

Main benefits

- High efficiency due to ZVS transition
- Low level of EMI emissions
- High power density

Applications

- LCD & PDP TV
- High-End and Industrial application
- Offline LED drivers

AQ Magnetica's added value

- Up to 800W output power in a compact and thermal-wise design
- Up to 95% efficiency.
- Leakage inductance integrated thanks to in-house transformer design & manufacturing
- Up to 4kV primary-to-secondary insulation
- High power density up to 106W/in3
- Recognized supplier for ST Microelectronics evaluation boards

1860 series

LLC Resonant Switch Mode Transformer
Up to 130÷300W
Core size ETD 34

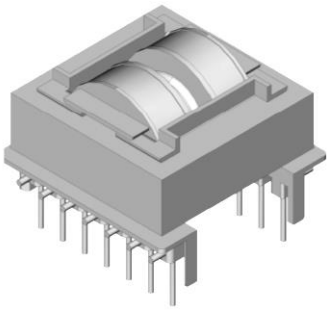

MAIN FEATURES

- ✓ LEAKAGE INDUCTANCE INTEGRATED
- ✓ REINFORCED INSULATION CLASS II (4KV)
- ✓ CLASS "F" INSULATION SYSTEM RECOGNIZED
- ✓ ACCORDING TO UL94-V0 LISTED MATERIALS
- ✓ ACCORDING TO EN 61558-2-16
- ✓ COMPATIBLE WITH:

STM: L6585, L6598, L6599, L6699
FAIRCHILD: FANXXXX, FLSXXXX, FSFRXXXX
TEXAS: UCC25600, UC286X
POWER INTEGRATIONS: LCS7XX, PLC810
INFINEON: ICEXHS01

DISTINGUISHING FEATURES

- ✓ OFFICIAL TRANSFORMER FOR:
  - **STEVAL-ILL053V1**
  - **STEVAL-ILL052V1**
  - **EVL150W-ADP-SR**
  - **EVL6699-90W-ADP**
  - **EVL6699-150W-SR**
- ✓ AVAILABLE WITH PRIMARY OR SECONDARY REGULATION
- ✓ AVAILABLE WITH SECONDARY SIDE SHORT CIRCUIT PROTECTION
- ✓ LEAKAGE INDUCTANCE SYMMETRY REGULATION
- ✓ HIGHEST POWER/VOLUME RATIO
- ✓ FULLY CUSTOMIZABLE
- ✓ 3D STEP FILE AVAILABLE

ELECTRICAL CHARACTERISTICS

VOLTAGE INPUT	120-450	VDC
VOLTAGE INPUT ELCAP LESS	120-550	VDC
VOLTAGE OUTPUT	12-120	VDC
WORKING FREQUENCY	30-300	KHZ
MAX OUTPUT POWER (WITH PFC)	300	W
EFFICIENCY	UP TO 95	%
WEIGHT	60	g
STORAGE CONDITIONS (RH ≤ 75%)	-20 ÷ +85	°C

DE-RATING POWER VS TA

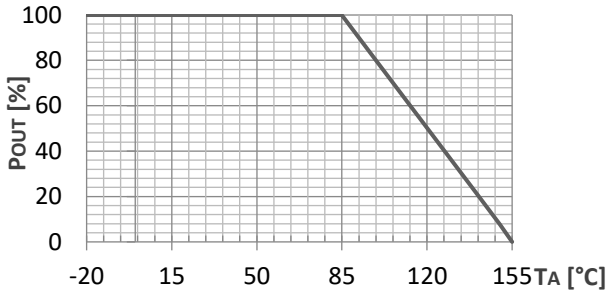

PHYSICAL PARAMETERS

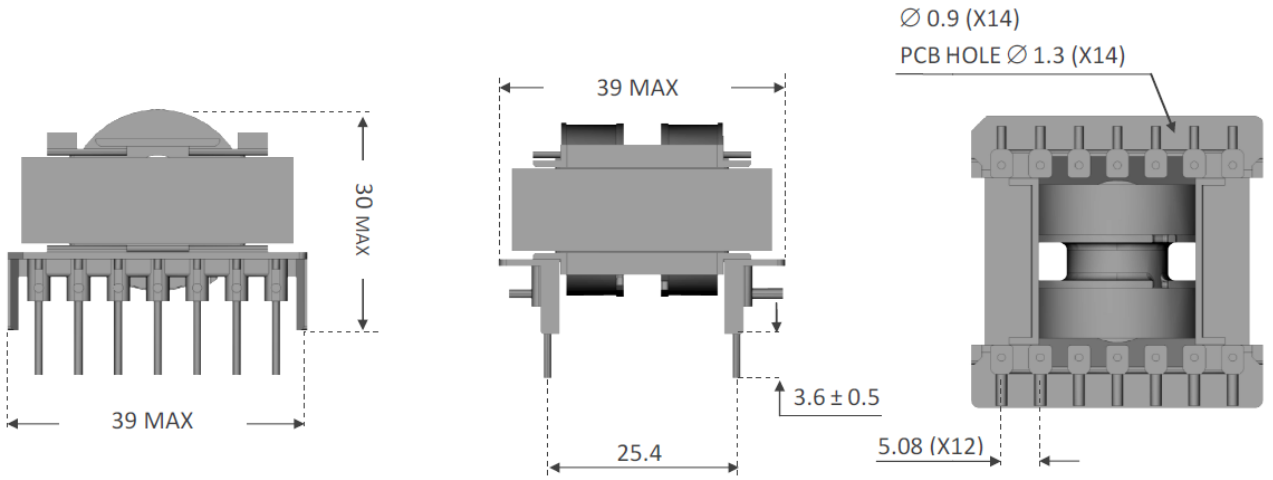

RoHS Compliant

1892 series

LLC Resonant Switch Mode Transformer
Up to 300÷800W
Core size ETD 49

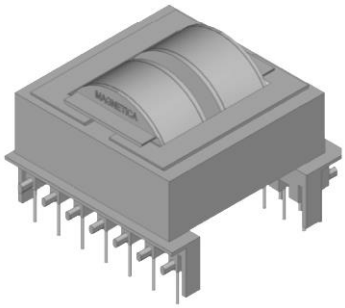

MAIN FEATURES

- ✓ LEAKAGE INDUCTANCE INTEGRATED
- ✓ REINFORCED INSULATION CLASS II (4KV)
- ✓ CLASS "F" INSULATION SYSTEM RECOGNIZED
- ✓ ACCORDING TO UL94-V0 LISTED MATERIALS
- ✓ ACCORDING TO EN 61558-2-16
- ✓ COMPATIBLE WITH:

  STM: L6585, L6598, L6599, L6699
  FAIRCHILD: FANXXXX, FLSXXXX, FSFRXXXX
  TEXAS: UCC25600, UC286X
  POWER INTEGRATIONS: LCS7XX, PLC810
  INFINEON: ICEXHS01

DISTINGUISHING FEATURES

- ✓ AVAILABLE WITH PRIMARY OR SECONDARY REGULATION
- ✓ AVAILABLE WITH SECONDARY SIDE SHORT CIRCUIT PROTECTION
- ✓ LEAKAGE INDUCTANCE SYMMETRY REGULATION
- ✓ UP TO 2KW OF PEAK POWER
- ✓ HIGHEST POWER/VOLUME RATIO
- ✓ COIL FORMER WITH TWO LINES OF PINS ON SECONDARY SIDE
- ✓ FULLY CUSTOMIZABLE
- ✓ 3D STEP FILE AVAILABLE

ELECTRICAL CHARACTERISTICS

VOLTAGE INPUT	120-450	VDC
VOLTAGE OUTPUT	12-120	VDC
WORKING FREQUENCY	30-300	KHZ
MAX OUTPUT POWER	800	W
MAX OUTPUT PEAK POWER	2000	W
EFFICIENCY	UP TO 95	%
WEIGHT	200	g
STORAGE CONDITIONS (RH ≤ 75%)	-20 ÷ +85	°C

DE-RATING POWER VS T_A

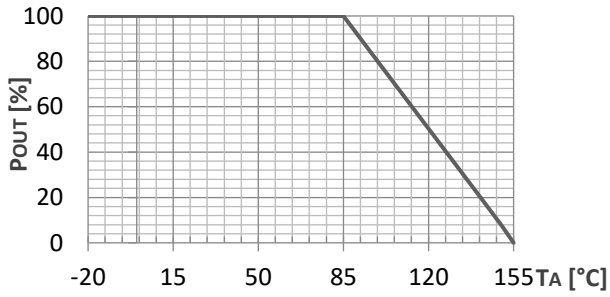

PHYSICAL PARAMETERS

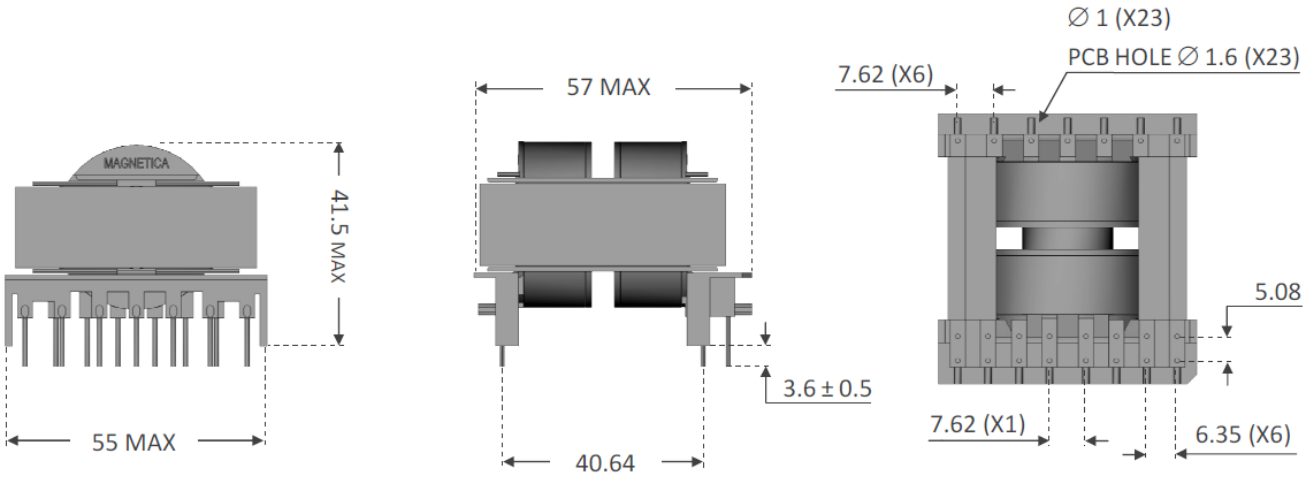

RoHS Compliant

2169 series

LLC Resonant Switch Mode Transformer
Up to 130÷300W
Core size ETD 34

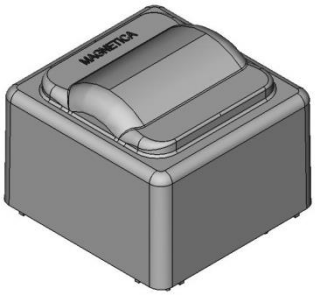

MAIN FEATURES

- ✓ LEAKAGE INDUCTANCE INTEGRATED
- ✓ REINFORCED INSULATION UP TO (10KV)
- ✓ CLASS "F" INSULATION SYSTEM RECOGNIZED
- ✓ ACCORDING TO UL94-V0 LISTED MATERIALS
- ✓ ACCORDING TO EN 61558-2-16
- ✓ COMPATIBLE WITH:

  STM: L6585, L6598, L6599, L6699
  FAIRCHILD: FANXXXX, FLSXXXX, FSFRXXXX
  TEXAS: UCC25600, UC286X
  POWER INTEGRATIONS: LCS7XX, PLC810
  INFINEON: ICEXHS01

DISTINGUISHING FEATURES

- ✓ AVAILABLE WITH PRIMARY OR SECONDARY REGULATION
- ✓ AVAILABLE WITH SECONDARY SIDE SHORT CIRCUIT PROTECTION
- ✓ LEAKAGE INDUCTANCE SYMMETRY REGULATION
- ✓ HIGHEST POWER/VOLUME RATIO
- ✓ FULLY CUSTOMIZABLE
- ✓ 3D STEP FILE AVAILABLE

ELECTRICAL CHARACTERISTICS

VOLTAGE INPUT	120-450	VDC
VOLTAGE INPUT ELCAP LESS	120-550	VDC
VOLTAGE OUTPUT	12-120	VDC
WORKING FREQUENCY	30-300	KHZ
MAX OUTPUT POWER (WITH PFC)	300	W
EFFICIENCY	UP TO 95	%
WEIGHT	110	g
STORAGE CONDITIONS (RH ≤ 75%)	-20 ÷ +85	°C

DE-RATING POWER VS T_A

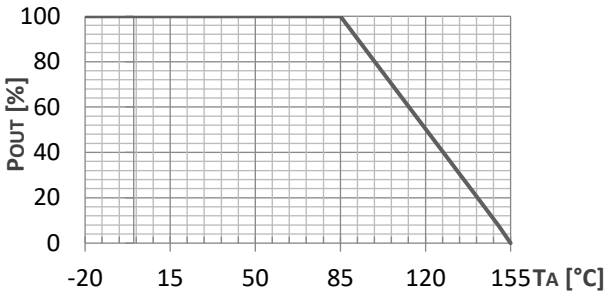

PHYSICAL PARAMETERS

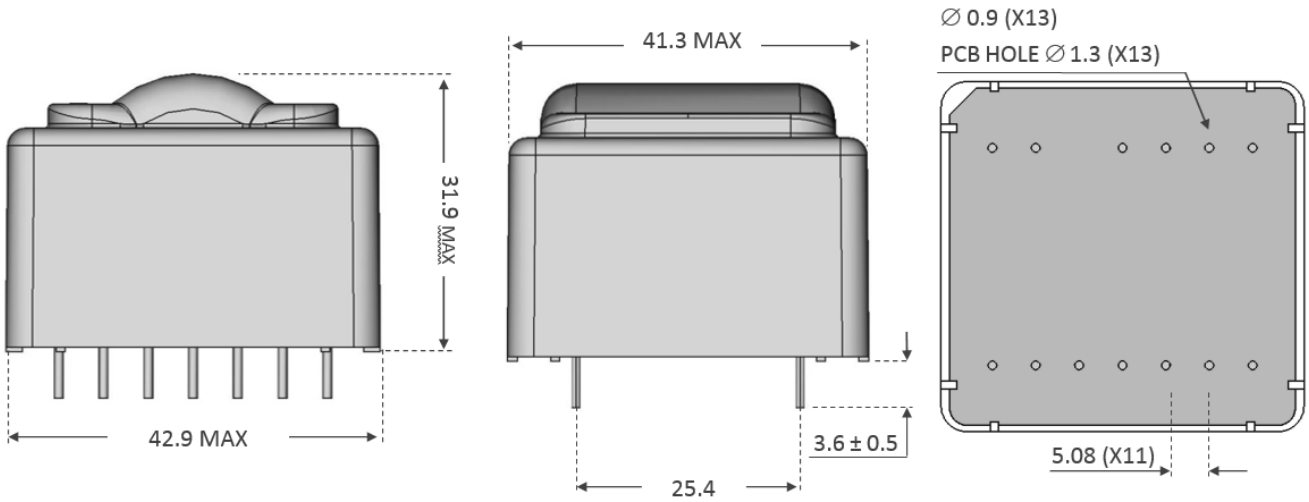

RoHS Compliant

2204 series

LLC Resonant Switch Mode Transformer
Up to 50÷150W
Core size E 25/11

MAIN FEATURES

- ✓ LEAKAGE INDUCTANCE INTEGRATED
- ✓ REINFORCED INSULATION CLASS II (4KV)
- ✓ CLASS "F" INSULATION SYSTEM RECOGNIZED
- ✓ ACCORDING TO UL94-V0 LISTED MATERIALS
- ✓ ACCORDING TO EN 61558-2-16
- ✓ COMPATIBLE WITH:

STM: L6585, L6598, L6599, L6699
FAIRCHILD: FANxxxx, FLSxxxx, FSFRxxxx
TEXAS: UCC25600, UC286x
POWER INTEGRATIONS: LCS7xx, PLC810
INFINEON: ICExHS01

DISTINGUISHING FEATURES

- ✓ AVAILABLE WITH AUXILIARY VOLTAGE
- ✓ LEAKAGE INDUCTANCE SYMMETRY REGULATION
- ✓ HIGHEST POWER/VOLUME RATIO
- ✓ FULLY CUSTOMIZABLE
- ✓ 3D STEP FILE AVAILABLE

ELECTRICAL CHARACTERISTICS

VOLTAGE INPUT	120-450	VDC
VOLTAGE INPUT ELCAP LESS	120-550	VDC
VOLTAGE OUTPUT	12-120	VDC
WORKING FREQUENCY	30-300	KHZ
MAX OUTPUT POWER	150	W
EFFICIENCY	UP TO 95	%
WEIGHT	30	g
STORAGE CONDITIONS (RH ≤ 75%)	-20 ÷ +85	°C

DE-RATING POWER VS T_A

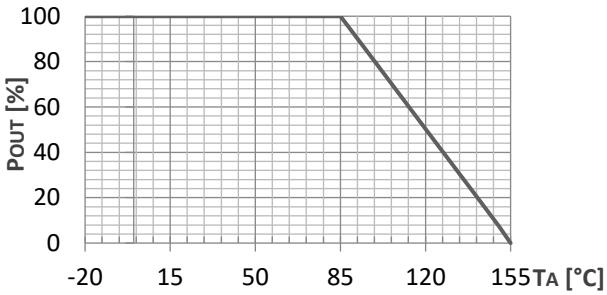

PHYSICAL PARAMETERS

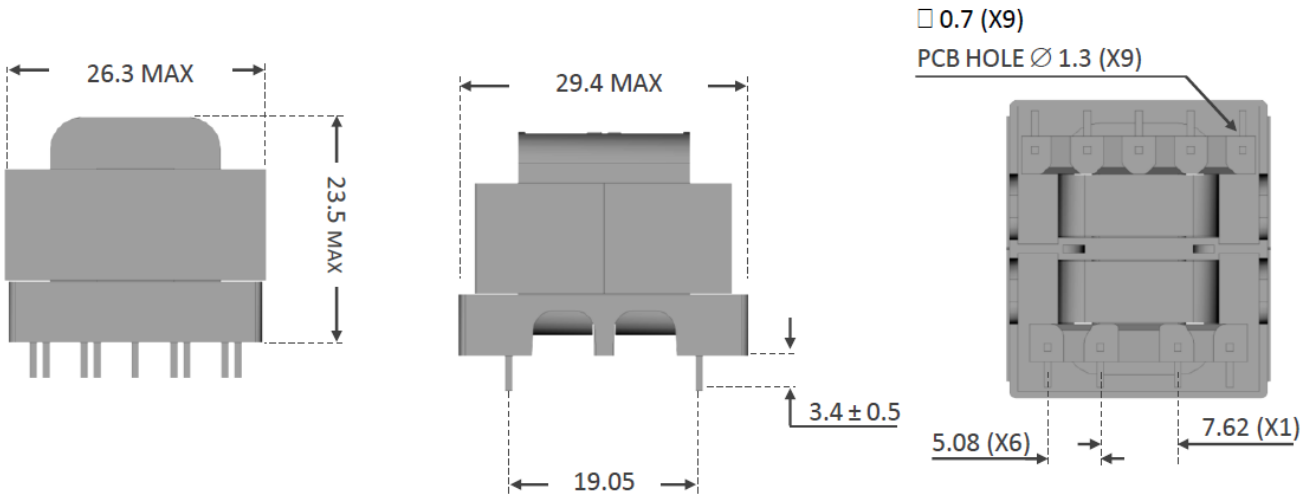

RoHS Compliant

2293 series

LLC Resonant Switch Mode Transformer
Up to 60÷110W
Core size E 22W

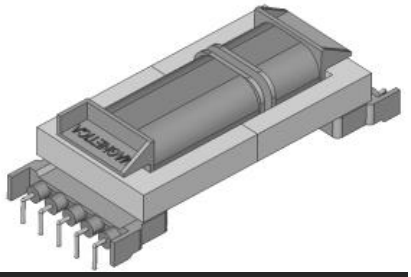

MAIN FEATURES

- ✓ LEAKAGE INDUCTANCE INTEGRATED
- ✓ REINFORCED INSULATION CLASS II (4KV)
- ✓ CLASS "F" INSULATION SYSTEM RECOGNIZED
- ✓ ACCORDING TO UL94-V0 LISTED MATERIALS
- ✓ ACCORDING TO EN 61558-2-16
- ✓ COMPATIBLE WITH:

  STM: L6585, L6598, L6599, L6699
  FAIRCHILD: FANxxxx, FLSxxxx, FSFRxxxx
  TEXAS: UCC25600, UC286x
  POWER INTEGRATIONS: LCS7xx, PLC810
  INFINEON: ICExHS01

DISTINGUISHING FEATURES

- ✓ LOW PROFILE COMPONENT
- ✓ LEAKAGE INDUCTANCE SYMMETRY REGULATION
- ✓ AVAILABLE IN "F" CLASS INSULATION SYSTEM RECOGNIZED
- ✓ HIGHEST POWER/VOLUME RATIO
- ✓ FULLY CUSTOMIZABLE
- ✓ 3D STEP FILE AVAILABLE

ELECTRICAL CHARACTERISTICS

VOLTAGE INPUT	120-450	VDC
VOLTAGE INPUT ELCAP LESS	120-550	VDC
VOLTAGE OUTPUT	24-120	VDC
WORKING FREQUENCY	30-300	KHZ
MAX OUTPUT POWER (WITH PFC)	110	W
EFFICIENCY	UP TO 95	%
WEIGHT	60	g
STORAGE CONDITIONS (RH ≤ 75%)	-20 ÷ +85	°C

DE-RATING POWER VS T_A

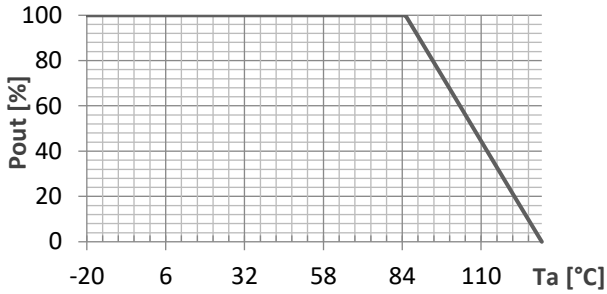

PHYSICAL PARAMETERS

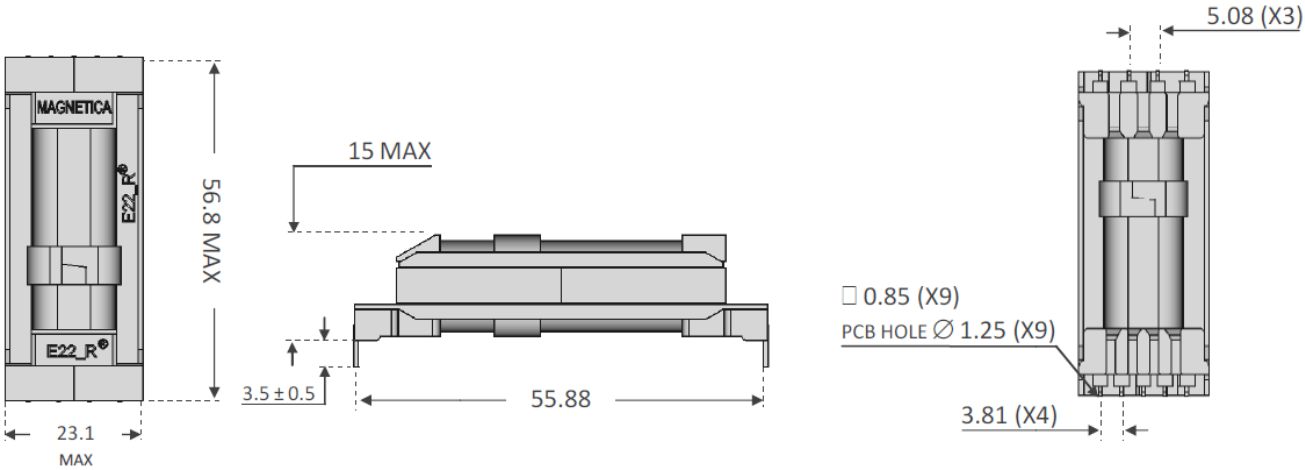

RoHS Compliant

PFC Boost

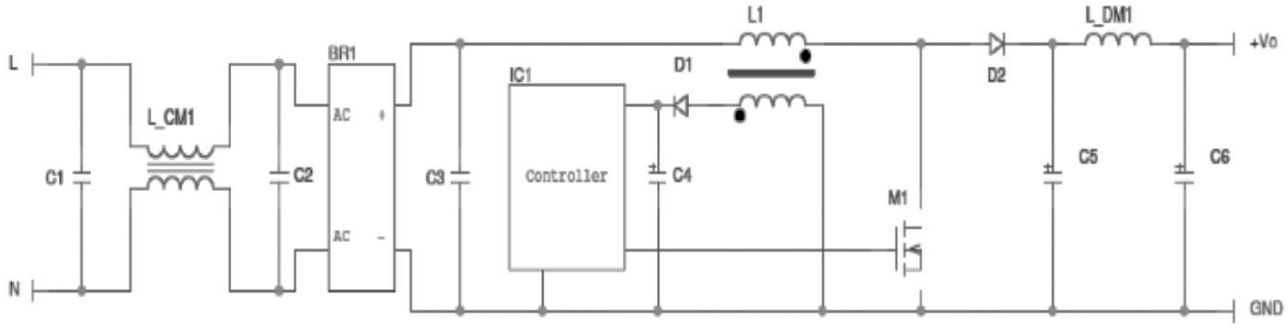

Main benefits

- Overall lower cost, size and weight when compared to passive solutions
- Minimizes current handling requirements for primary side of following DC-DC stages
- Benefits of latest technology improvements in high voltage MOSFETs
- Huge offer of controllers and switches
- Different control schemes available to suit specific applications and power levels (TM, FOT, Average current control, bridge-less and interleaved)

Applications

- Front-end in high-duty battery chargers
- Front-end in lighting-oriented converters (HID ballast, LED drivers)
- Front-end in adapters for consumer electronics
- Whenever high power factor is required to comply with energy regulations

AQ Magnetica's added value

- Output levels from 10W to 3kW in single stage design
- Wide choice of shapes and material (Toroids, E cores, PQ cores; ferrite, iron powder, kool-µ)
- Broad experience with controllers from various semiconductor manufacturers
- Recognized supplier for ST Microelectronics evaluation boards

Interleaved boost

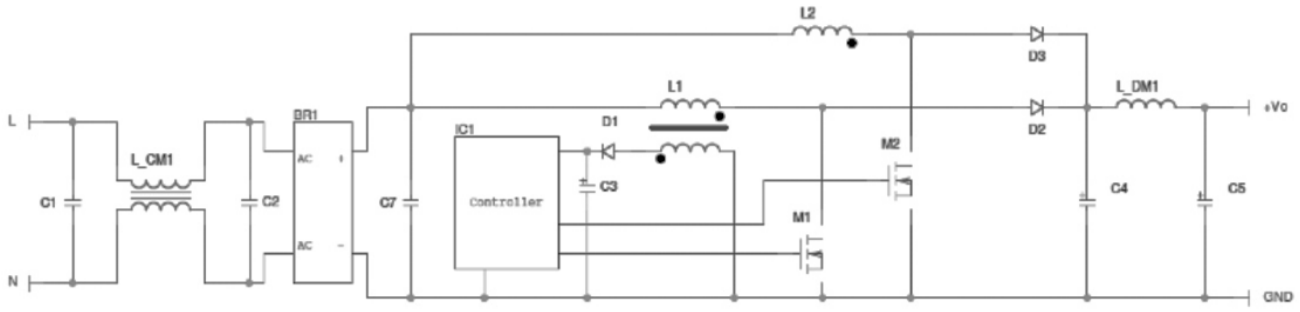

Main benefits

- Strongly reduced input and output current ripple
- Reduces requirements on input EMI filter and output capacitor bank
- Higher power densities achievable
- High efficiency at low load attained by switching off one or more channels
- Direct or inverse coupling of inductors possible to suit specific needs and reduce overall size & weight

Applications

- Front-end step up converter in Hybrid Electric Vehicles
- Front-end step un converter in non-isolated Photo Voltaic systems
- Step up in low voltage, battery powered equipment

AQ Magnetica's added value

- Output levels up to 4kW for dual channel common mode / differential mode in a single component
- Wide choice of shapes and materials (Toroids, E core, PQ core; ferrite, iron powder, kool-µ)
- Available in functionally-isolated version to optimize conversion ratio
- Recognized supplier for ST Microelectronics evaluation boards

Bridgeless boost

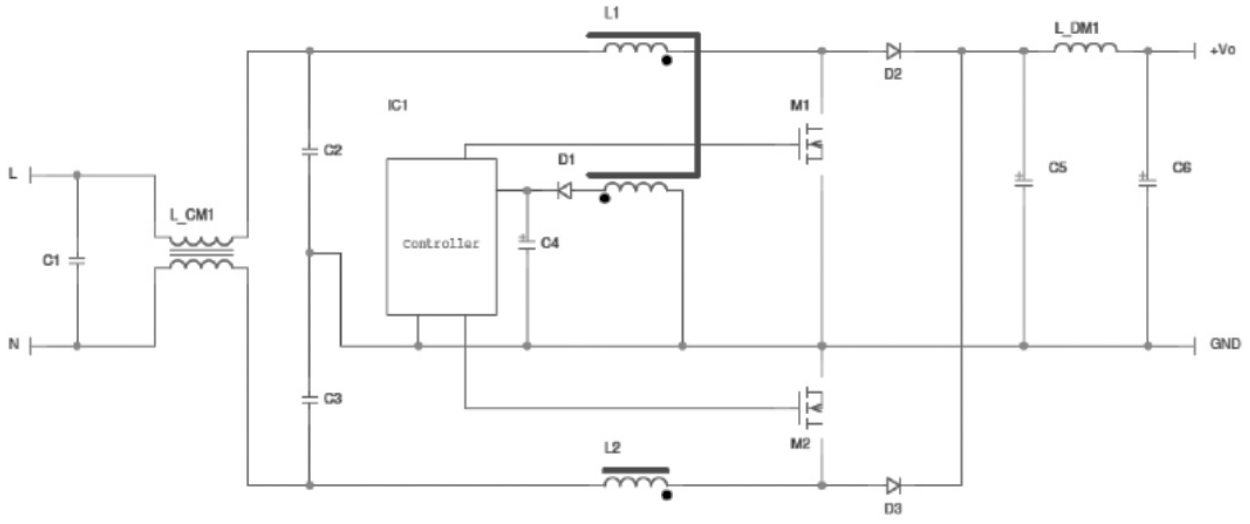

Main benefits

- Increased efficiency in high power application due to lower conduction losses
- Better thermal management due to absence of rectifier bridge
- In some schemes both MOSFETs can be driven by the same signal
- Various schemes available, also using interleaving between the two channels
- Inductor coupling possible to reduce common mode noise
- Both one-cycle-control and average CCM control suitable

Applications

- High power PFC preregulators

AQ Magnetica's added value

- Output levels from tens W to 3kW in single stage design
- Wide choice of shapes and material (Toroids, E core, PO core; ferrite, iron powder, kool-µ)
- Broad experience with controllers from various semiconductor manufacturers
- Recognized supplier for ST Microelectronics evaluation boards

1056 series

AC Line Filter Inductor
Core size: R27x11

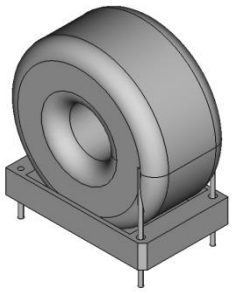

MAIN FEATURES

- ✓ HIGHEST POWER/VOLUME RATIO
- ✓ CLASS "B" INSULATION SYSTEM RECOGNIZED
- ✓ ACCORDING TO UL94-V0 LISTED MATERIALS
- ✓ ACCORDING TO EN 61558-2-16

DISTINGUISHING FEATURES

- ✓ AVAILABLE WITH LOW PARASITIC CAPACITANCE
- ✓ AVAILABLE IN ''F'' CLASS INSULATION SYSTEM RECOGNIZED
- ✓ FULLY CUSTOMIZABLE
- ✓ 3D STEP FILE AVAILABLE

ELECTRICAL CHARACTERISTICS

VOLTAGE INPUT	250	VAC
WORKING FREQUENCY	50-60	HZ
MAX OUTPUT POWER	750	W
EFFICIENCY	≥ 95	%
WEIGHT	35	g
STORAGE CONDITIONS (RH ≤ 75%)	-20 ÷ +85	°C

DE-RATING POWER VS T_A

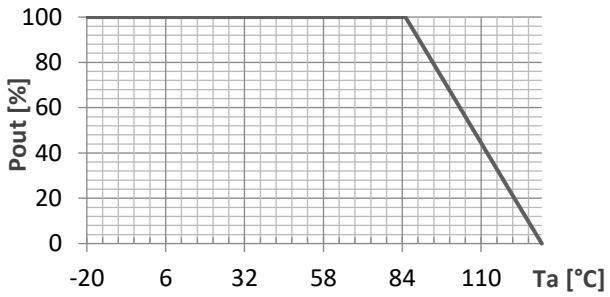

PHYSICAL PARAMETERS

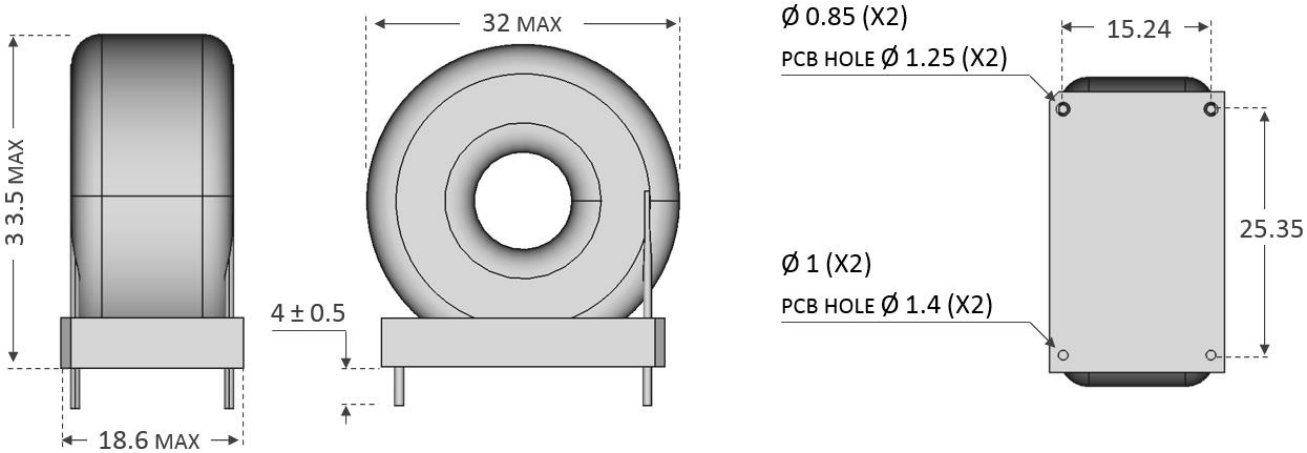

RoHS Compliant

1891 series

PFC Inductor
Up to 900W
Core size: PQ40/40

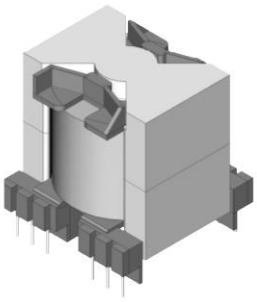

MAIN FEATURES

- ✓ HIGHEST POWER/VOLUME RATIO
- ✓ CLASS "B" INSULATION SYSTEM RECOGNIZED
- ✓ ACCORDING TO UL94-V0 LISTED MATERIALS
- ✓ ACCORDING TO EN 61558-2-16
- ✓ COMPATIBLE WITH:

  STM: L6561, L6562, L6563, L6564
  FAIRCHILD: FAN6982, FAN6961, FAN7930
  TEXAS: UCC28810, UCC28811
  INFINEON: ICE2PCSxx

DISTINGUISHING FEATURES

- ✓ AVAILABLE WITH LOW PARASITIC CAPACITANCE
- ✓ AVAILABLE WITH AUXILIARY WINDING FOR THE SUPPLY VOLTAGE
- ✓ AVAILABLE IN "F" CLASS INSULATION SYSTEM RECOGNIZED
- ✓ AVAILABLE WITH EXTERNAL SHIELD FOR THE EMI REQUIREMENTS
- ✓ FULLY CUSTOMIZABLE
- ✓ 3D STEP FILE AVAILABLE

ELECTRICAL CHARACTERISTICS

VOLTAGE INPUT	85-305	VAC
VOLTAGE OUTPUT	UP TO 500	VDC
WORKING FREQUENCY	50-200	KHZ
MAX OUTPUT POWER (EU RANGE)	900	W
MAX OUTPUT POWER (WIDE RANGE)	500	W
EFFICIENCY	≥ 95	%
WEIGHT	200	g
STORAGE CONDITIONS (RH ≤ 75%)	-20 ÷ +85	°C

DE-RATING POWER VS T_A

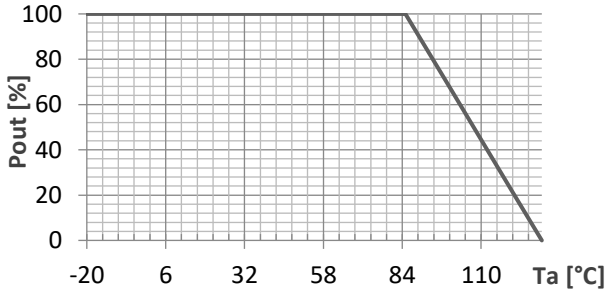

PHYSICAL PARAMETERS

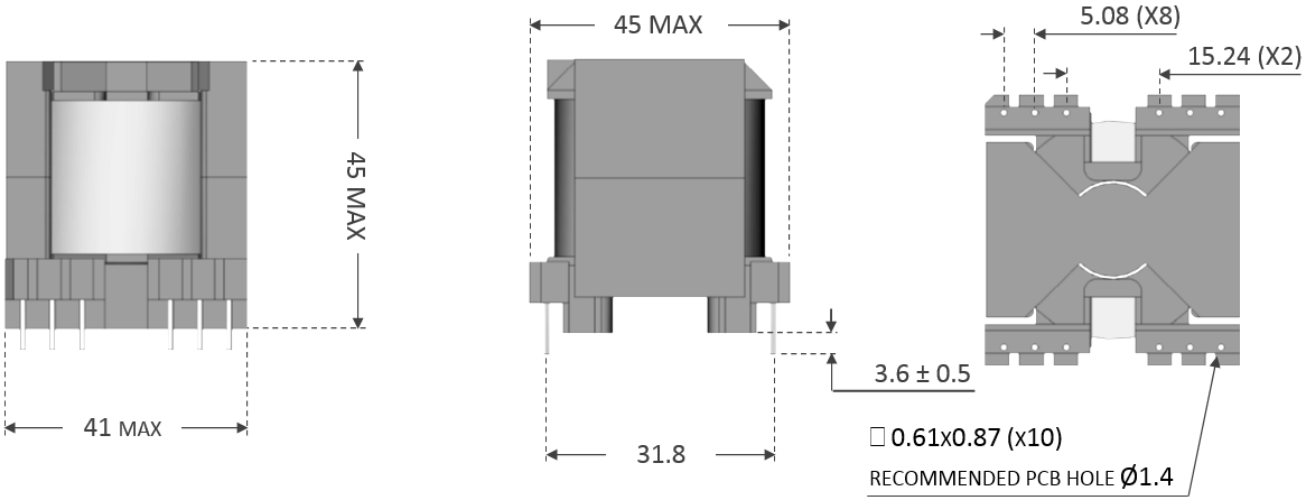

RoHS Compliant

1974 series

PFC Inductor
Up to 240W
Core size: PQ 26/20

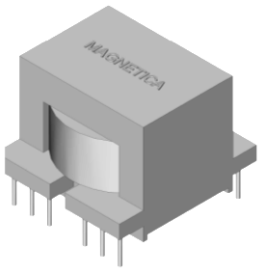

MAIN FEATURES

- ✓ HIGHEST POWER/VOLUME RATIO
- ✓ CLASS "B" INSULATION SYSTEM RECOGNIZED
- ✓ ACCORDING TO UL94-V0 LISTED MATERIALS
- ✓ ACCORDING TO EN 61558-2-16
- ✓ COMPATIBLE WITH:

  STM: L6561, L6562, L6563, L6564
  FAIRCHILD: FAN6982, FAN6961, FAN7930
  TEXAS: UCC28810, UCC28811
  INFINEON: ICE2PCSxx

DISTINGUISHING FEATURES

- ✓ OFFICIAL INDUCTOR FOR:
  STEVAL-ILL052V1
- ✓ AVAILABLE WITH LOW PARASITIC CAPACITANCE
- ✓ AVAILABLE WITH AUXILIARY WINDING FOR THE SUPPLY VOLTAGE
- ✓ AVAILABLE IN "F" CLASS INSULATION SYSTEM RECOGNIZED
- ✓ AVAILABLE WITH EXTERNAL SHIELD FOR THE EMI REQUIREMENTS
- ✓ FULLY CUSTOMIZABLE
- ✓ 3D STEP FILE AVAILABLE

ELECTRICAL CHARACTERISTICS

VOLTAGE INPUT	85-305	VAC
VOLTAGE OUTPUT	UP TO 500	VDC
WORKING FREQUENCY	50-200	KHZ
MAX OUTPUT POWER (EU RANGE)	240	W
MAX OUTPUT POWER (WIDE RANGE)	180	W
EFFICIENCY	≥ 95	%
WEIGHT	45	g
STORAGE CONDITIONS (RH ≤ 75%)	-20 ÷ +85	°C

DE-RATING POWER VS T_A

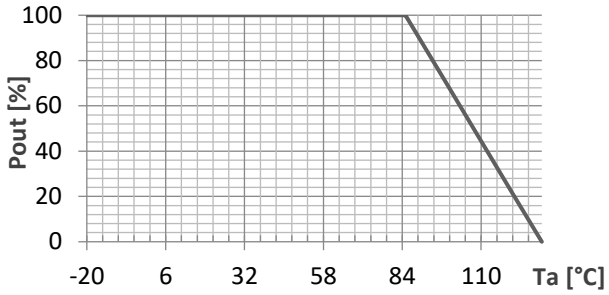

PHYSICAL PARAMETERS

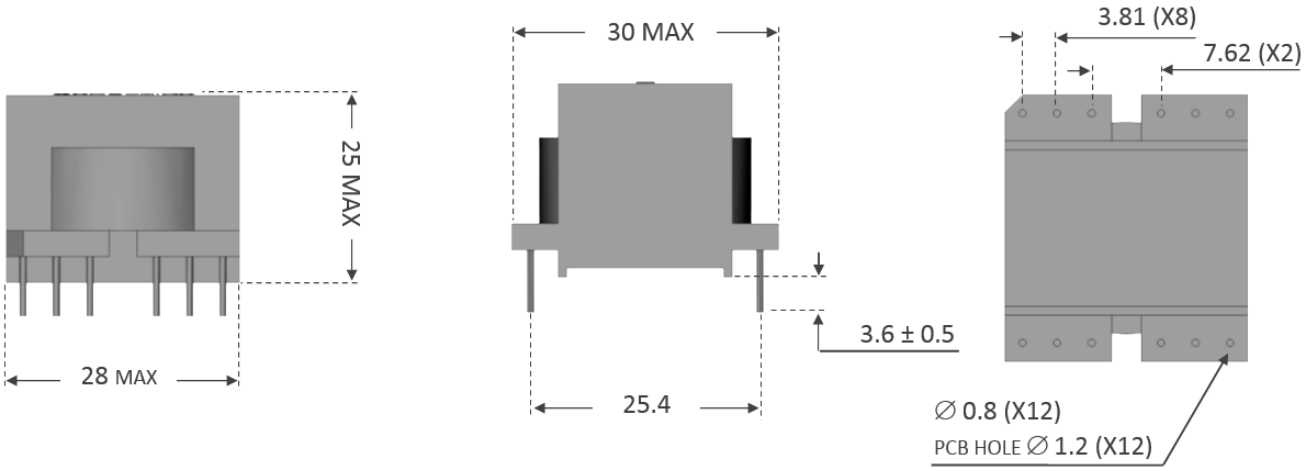

RoHS Compliant

1975 series

PFC Inductor
Up to 300W
Core size: PQ 26/25

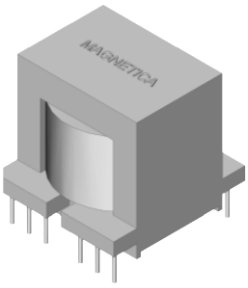

MAIN FEATURES

- ✓ HIGHEST POWER/VOLUME RATIO
- ✓ CLASS "B" INSULATION SYSTEM RECOGNIZED
- ✓ ACCORDING TO UL94-V0 LISTED MATERIALS
- ✓ ACCORDING TO EN 61558-2-16
- ✓ COMPATIBLE WITH:

  STM: L6561, L6562, L6563, L6564
  FAIRCHILD: FAN6982, FAN6961, FAN7930
  TEXAS: UCC28810, UCC28811
  INFINEON: ICE2PCSxx

DISTINGUISHING FEATURES

- ✓ OFFICIAL INDUCTOR FOR:
  STEVAL-ILL053V1
  EVL150W-ADP-SR
- ✓ AVAILABLE WITH LOW PARASITIC CAPACITANCE
- ✓ AVAILABLE WITH AUXILIARY WINDING FOR THE SUPPLY VOLTAGE
- ✓ AVAILABLE IN "F" CLASS INSULATION SYSTEM RECOGNIZED
- ✓ AVAILABLE WITH EXTERNAL SHIELD FOR THE EMI REQUIREMENTS
- ✓ FULLY CUSTOMIZABLE
- ✓ 3D STEP FILE AVAILABLE

ELECTRICAL CHARACTERISTICS

VOLTAGE INPUT	85-305	VAC
VOLTAGE OUTPUT	UP TO 500	VDC
WORKING FREQUENCY	50-200	KHZ
MAX OUTPUT POWER (EU RANGE)	300	W
MAX OUTPUT POWER (WIDE RANGE)	200	W
EFFICIENCY	≥ 95	%
WEIGHT	55	g
STORAGE CONDITIONS (RH ≤ 75%)	-20 ÷ +85	°C

DE-RATING POWER VS T_A

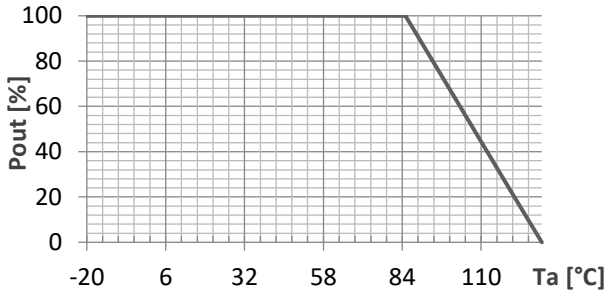

PHYSICAL PARAMETERS

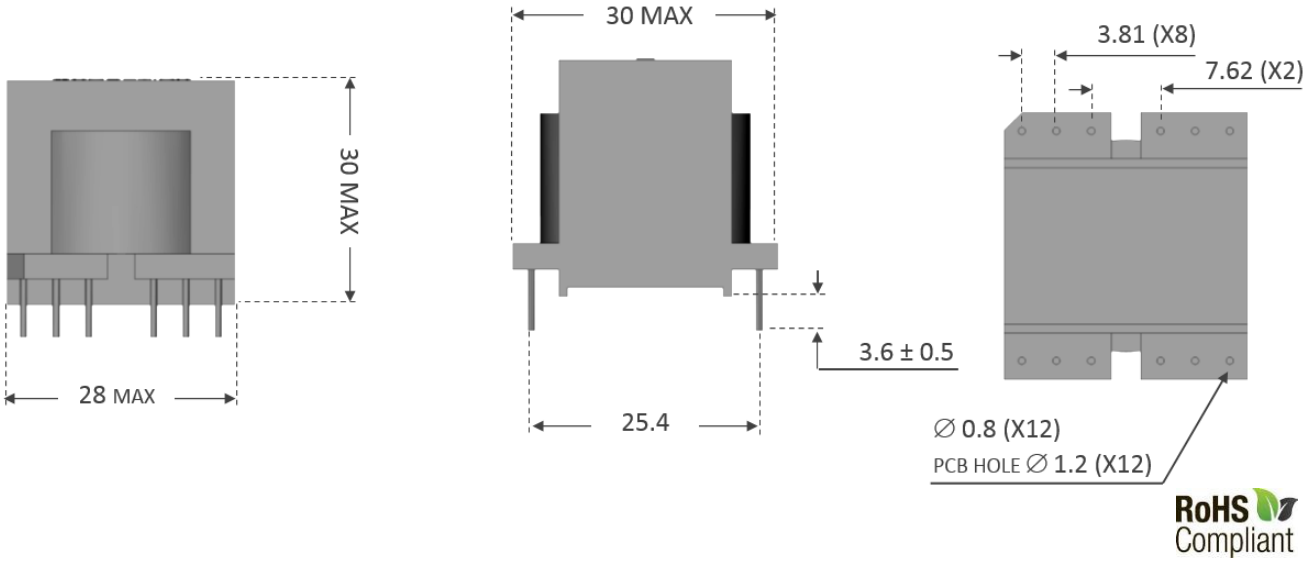

RoHS Compliant

2083 series

PFC Inductor
Up to 400W
Core size: PQ 32/30

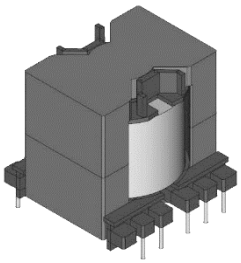

MAIN FEATURES

- ✓ HIGHEST POWER/VOLUME RATIO
- ✓ CLASS "B" INSULATION SYSTEM RECOGNIZED
- ✓ ACCORDING TO UL94-V0 LISTED MATERIALS
- ✓ ACCORDING TO EN 61558-2-16
- ✓ COMPATIBLE WITH:

  STM: L6561, L6562, L6563, L6564
  FAIRCHILD: FAN6982, FAN6961, FAN7930
  TEXAS: UCC28810, UCC28811
  INFINEON: ICE2PCSxx

DISTINGUISHING FEATURES

- ✓ AVAILABLE WITH LOW PARASITIC CAPACITANCE
- ✓ AVAILABLE WITH AUXILIARY WINDING FOR THE SUPPLY VOLTAGE
- ✓ AVAILABLE IN ''F'' CLASS INSULATION SYSTEM RECOGNIZED
- ✓ AVAILABLE WITH EXTERNAL SHIELD FOR THE EMI REQUIREMENTS
- ✓ FULLY CUSTOMIZABLE
- ✓ 3D STEP FILE AVAILABLE

ELECTRICAL CHARACTERISTICS

VOLTAGE INPUT	85-305	VAC
VOLTAGE OUTPUT	UP TO 500	VDC
WORKING FREQUENCY	50-200	KHZ
MAX OUTPUT POWER (EU RANGE)	400	W
MAX OUTPUT POWER (WIDE RANGE)	300	W
EFFICIENCY	≥95	%
WEIGHT	75	g
STORAGE CONDITIONS (RH ≤ 75%)	-20 ÷ +85	°C

DE-RATING POWER VS T_A

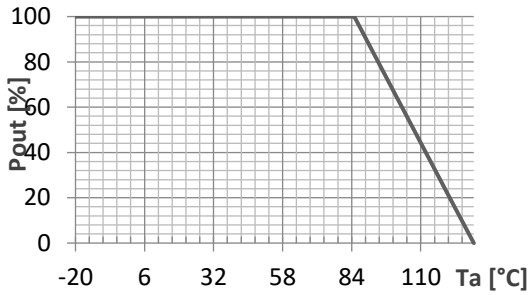

PHYSICAL PARAMETERS

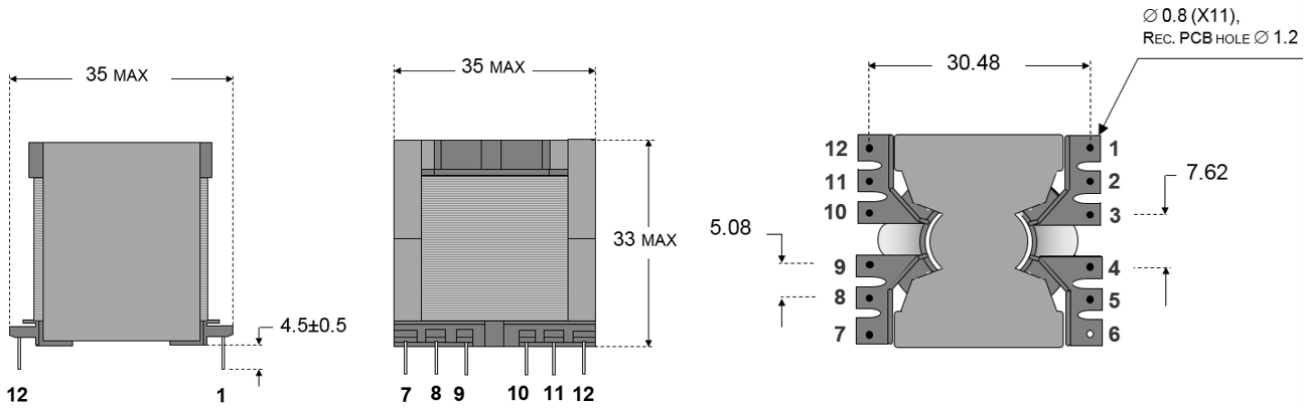

RoHS Compliant

2097 series

PFC Inductor
Up to 600W
Core size: PQ 35/35

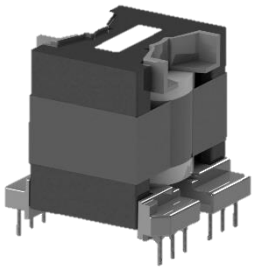

MAIN FEATURES

- ✓ HIGHEST POWER/VOLUME RATIO
- ✓ CLASS "B" INSULATION SYSTEM RECOGNIZED
- ✓ ACCORDING TO UL94-V0 LISTED MATERIALS
- ✓ ACCORDING TO EN 61558-2-16
- ✓ COMPATIBLE WITH:

  STM: L6561, L6562, L6563, L6564
  FAIRCHILD: FAN6982, FAN6961, FAN7930
  TEXAS: UCC28810, UCC28811
  INFINEON: ICE2PCSxx

DISTINGUISHING FEATURES

- ✓ AVAILABLE WITH LOW PARASITIC CAPACITANCE
- ✓ AVAILABLE WITH AUXILIARY WINDING FOR THE SUPPLY VOLTAGE
- ✓ AVAILABLE IN "F" CLASS INSULATION SYSTEM RECOGNIZED
- ✓ AVAILABLE WITH EXTERNAL SHIELD FOR THE EMI REQUIREMENTS
- ✓ FULLY CUSTOMIZABLE
- ✓ 3D STEP FILE AVAILABLE

ELECTRICAL CHARACTERISTICS

VOLTAGE INPUT	85-305	VAC
VOLTAGE OUTPUT	UP TO 500	VDC
WORKING FREQUENCY	50-200	KHZ
MAX OUTPUT POWER (EU RANGE)	600	W
MAX OUTPUT POWER (WIDE RANGE)	400	W
EFFICIENCY	≥95	%
WEIGHT	120	g
STORAGE CONDITIONS (RH ≤ 75%)	-20 ÷ +85	°C

DE-RATING POWER VS T_A

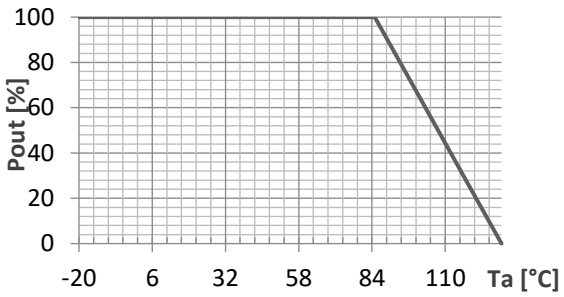

PHYSICAL PARAMETERS

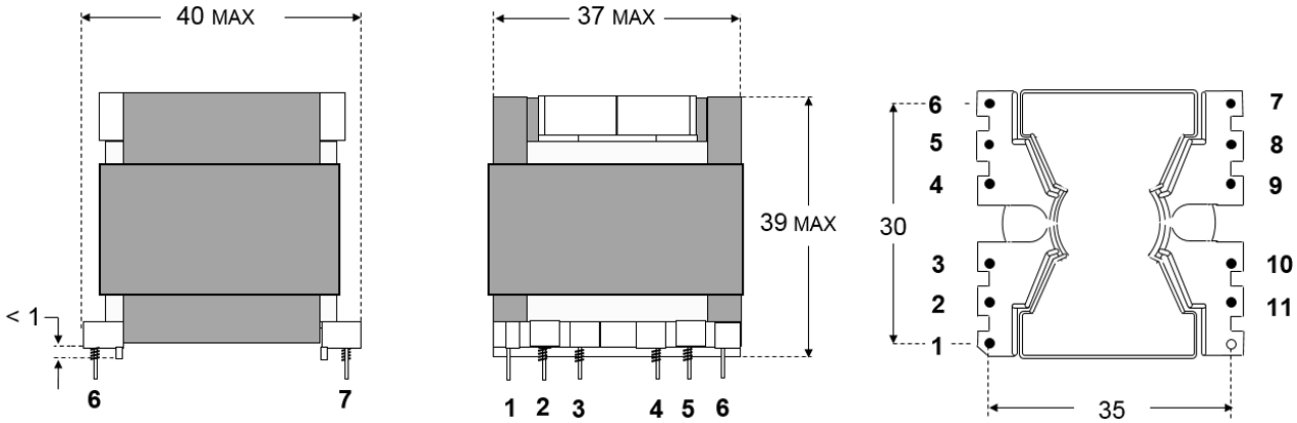

RoHS Compliant

2233 series

PFC Inductor
Up to 120W
Core size: E20/10/11

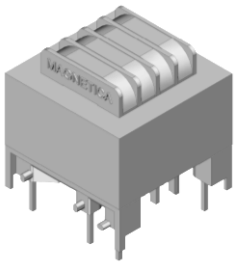

MAIN FEATURES

- ✓ HIGHEST POWER/VOLUME RATIO
- ✓ CLASS "B" INSULATION SYSTEM RECOGNIZED
- ✓ ACCORDING TO UL94-V0 LISTED MATERIALS
- ✓ ACCORDING TO EN 61558-2-16
- ✓ COMPATIBLE WITH:

  STM: L6561, L6562, L6563, L6564
  FAIRCHILD: FAN6982, FAN6961, FAN7930
  TEXAS: UCC28810, UCC28811
  INFINEON: ICE2PCSxx

DISTINGUISHING FEATURES

- ✓ RECOMMENDED IN HIGH VOLTAGE OUTPUT-INPUT RATIO
- ✓ LOW PARASITIC CAPACITANCE
- ✓ AVAILABLE WITH AUXILIARY WINDING FOR THE SUPPLY VOLTAGE
- ✓ AVAILABLE IN "F" CLASS INSULATION SYSTEM RECOGNIZED
- ✓ FULLY CUSTOMIZABLE
- ✓ 3D STEP FILE AVAILABLE

ELECTRICAL CHARACTERISTICS

VOLTAGE INPUT	85-305	VAC
VOLTAGE OUTPUT	UP TO 500	VDC
WORKING FREQUENCY	50-200	KHZ
MAX OUTPUT POWER (EU RANGE)	120	W
MAX OUTPUT POWER (WIDE RANGE)	80	W
EFFICIENCY	≥ 95	%
WEIGHT	20	g
STORAGE CONDITIONS (RH ≤ 75%)	-20 ÷ +85	°C

DE-RATING POWER VS T_A

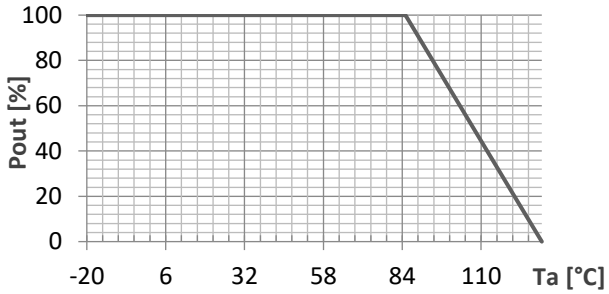

PHYSICAL PARAMETERS

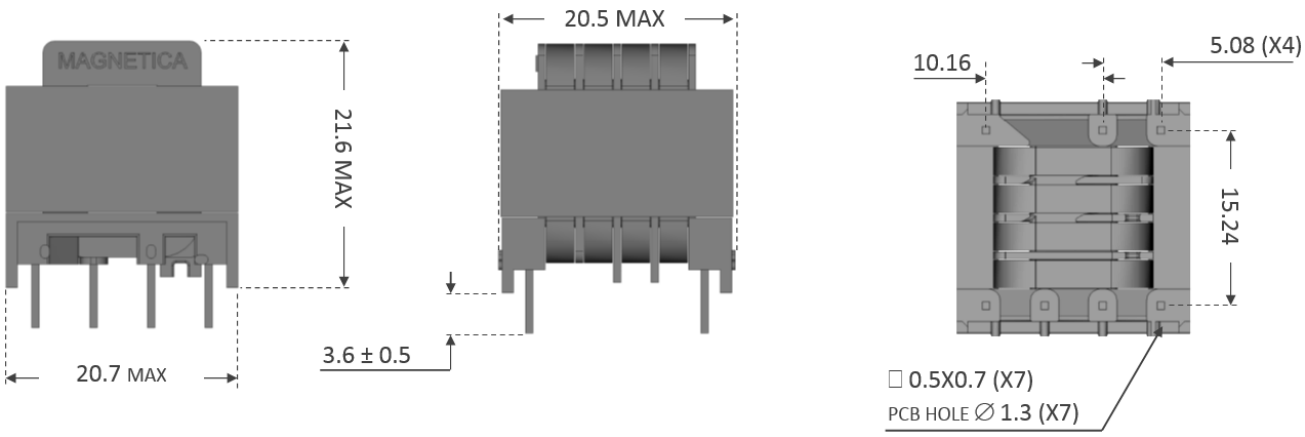

RoHS Compliant

2263 series

PFC Inductor
Up to 180W
Core size: PQ 20/20

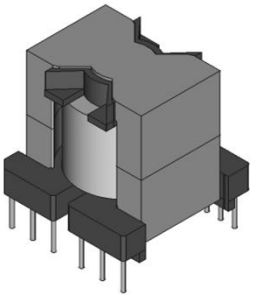

MAIN FEATURES

- ✓ HIGHEST POWER/VOLUME RATIO
- ✓ CLASS "B" INSULATION SYSTEM RECOGNIZED
- ✓ ACCORDING TO UL94-V0 LISTED MATERIALS
- ✓ ACCORDING TO EN 61558-2-16
- ✓ COMPATIBLE WITH:

STM: L6561, L6562, L6563, L6564
FAIRCHILD: FAN6982, FAN6961, FAN7930
TEXAS: UCC28810, UCC28811
INFINEON: ICE2PCSxx

DISTINGUISHING FEATURES

- ✓ HIGHEST POWER/VOLUME RATIO
- ✓ CLASS "B" INSULATION SYSTEM RECOGNIZED
- ✓ ACCORDING TO UL94-V0 LISTED MATERIALS
- ✓ ACCORDING TO EN 61558-2-16
- ✓ COMPATIBLE WITH:

STM: L6561, L6562, L6563, L6564
FAIRCHILD: FAN6982, FAN6961, FAN7930
TEXAS: UCC28810, UCC28811
INFINEON: ICE2PCSxx

ELECTRICAL CHARACTERISTICS

VOLTAGE INPUT	85-305	VAC
VOLTAGE OUTPUT	UP TO 500	VDC
WORKING FREQUENCY	50-200	KHZ
MAX OUTPUT POWER (EU RANGE)	180	W
MAX OUTPUT POWER (WIDE RANGE)	140	W
EFFICIENCY	≥ 95	%
WEIGHT	25	g
STORAGE CONDITIONS (RH ≤ 75%)	-20 ÷ +85	°C

DE-RATING POWER VS T_A

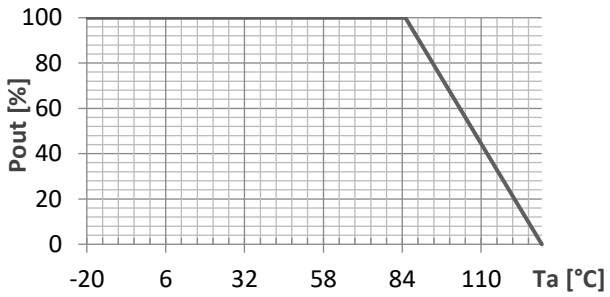

PHYSICAL PARAMETERS

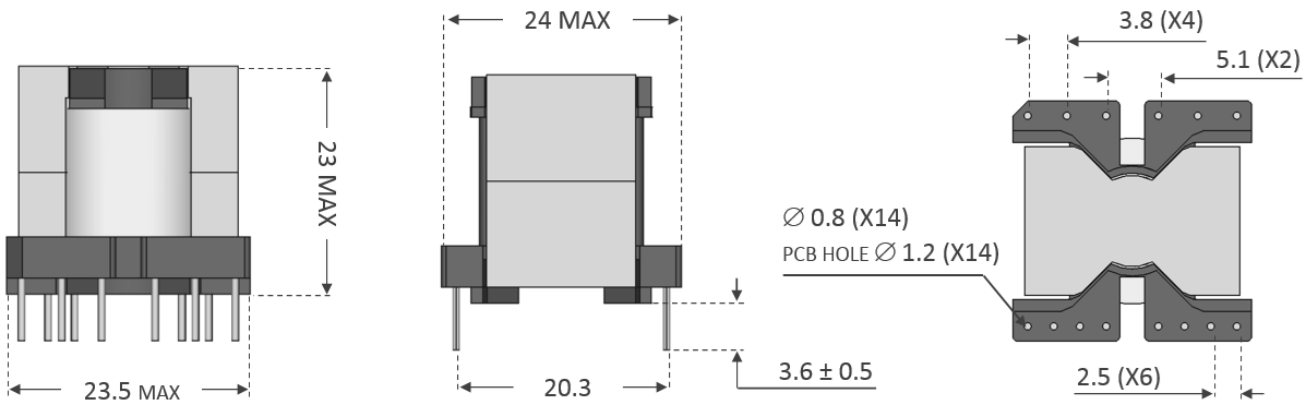

RoHS Compliant

2292 series

PFC inductor
Up to 100W
Core size: E22E

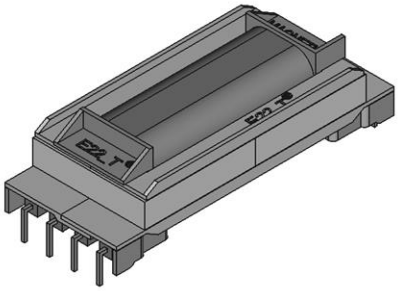

MAIN FEATURES

- ✓ SUITABLE IN PFC BOOST CONVERTER OPERATING IN TRANSITION MODE OR FOT CONFIGURATION
- ✓ CLASS "B" INSULATION SYSTEM RECOGNIZED
- ✓ ACCORDING TO UL94-V0 LISTED MATERIALS
- ✓ ACCORDING TO EN 61558-2-16
- ✓ COMPATIBLE WITH:

  STM: L6561, L6562, L6563, L6564
  FAIRCHILD: FAN6982, FAN6961, FAN7930
  TEXAS: UCC28810, UCC28811
  INFINEON: ICE2PCSxx

DISTINGUISHING FEATURES

- ✓ SUITABLE FOR REPLACEMENT OF T8 NEON TUBES WITH LEDS, LOW PROFILE COMPONENT
- ✓ AVAILABLE WITH LOW PARASITIC CAPACITANCE
- ✓ AVAILABLE WITH AUXILIARY WINDING FOR THE SUPPLY VOLTAGE
- ✓ AVAILABLE IN "F" CLASS INSULATION SYSTEM RECOGNIZED
- ✓ AVAILABLE WITH EXTERNAL SHIELD FOR THE EMI REQUIREMENTS
- ✓ FULLY CUSTOMIZABLE
- ✓ 3D STEP FILE AVAILABLE

ELECTRICAL CHARACTERISTICS

Voltage Input	85-305	Vac
Voltage Output	up to 500	Vdc
Working Frequency	50-200	kHz
Max Output Power (EU range)	100	W
Max Output Power (wide range)	85	W
Efficiency	≥ 95	%
Weight	11	g
Storage Conditions (RH ≤ 75%)	-20 ÷ +85	°C

DE-RATING POWER VS T_A

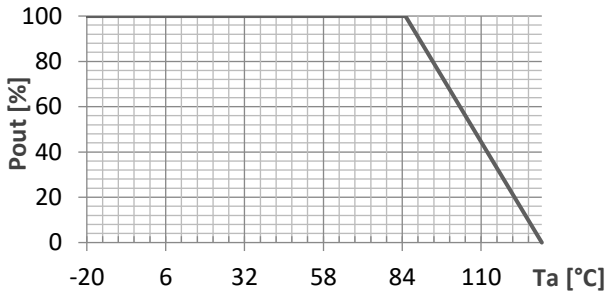

PHYSICAL PARAMETERS

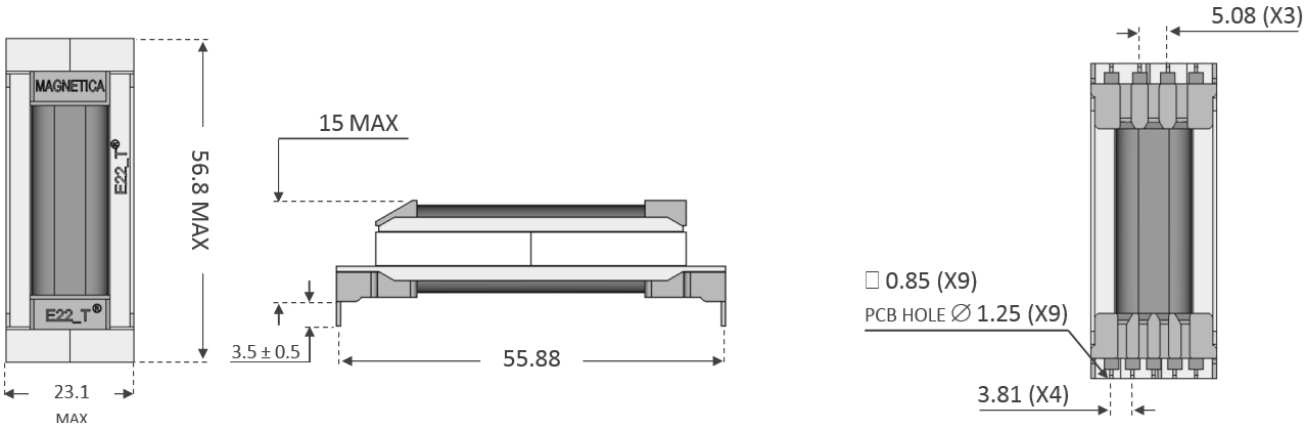

RoHS Compliant

Phase Shift

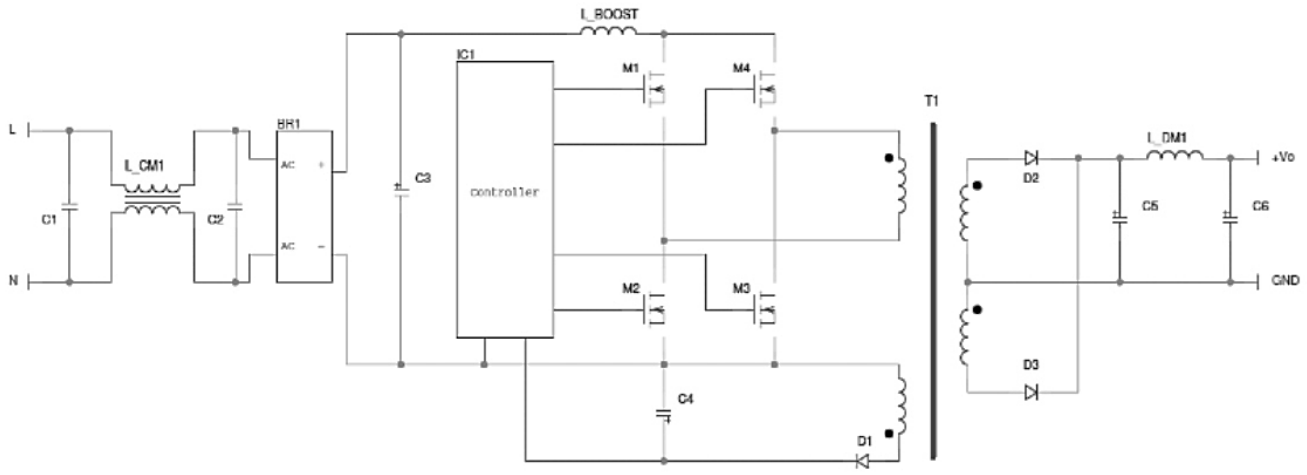

Main benefits

- Higher efficiency thanks to ZVS when compared to plain full bridge topology
- Phase shift control on either primary or secondary (w/MOSFETs) side
- Parasitic of full bridge transformer and MOSFETs can actually be used rather than snubbed to implement resonant switching
- Fixed or variable switching frequency viable
- Lower EMI signature due to soft transitions

Applications

- Mid to high power range industrial power supply
- Step up stage in isolated photovoltaic inverters
- Front-end in server power systems
- High power telecommunication power supply

AQ Magnetica's added value

- Up to 3kW output power in a compact and thermal-wise design
- Matched parts available for LCL filtering in inverter stage
- Up to 4kV primary-to-secondary insulation
- Resonant inductance integrated in the transformer
- Recognized supplier for ST Microelectronics evaluation boards

2006 series

Hypercoil
Up to 4KW
Core size: 2x70/33/32

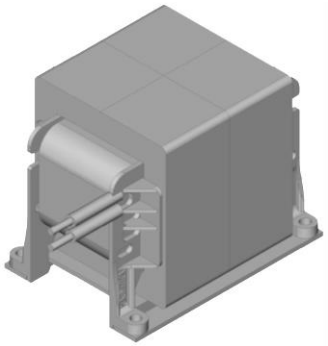

MAIN FEATURES

- ✓ MAINLY DEVELOPED FOR BOOST AND LCL INDUCTORS OF PV INVERTER APPLICATION
- ✓ CLASS "F" INSULATION SYSTEM RECOGNIZED
- ✓ ACCORDING TO UL94-V0 LISTED MATERIALS
- ✓ ACCORDING TO EN 61558-2-16

DISTINGUISHING FEATURES

- ✓ LOW DECREASE INDUCTANCE VS CURRENT @ 100°C T_{AMB}
- ✓ METAL BRACKET FOR HEAT DISSIPATION
- ✓ HIGHEST POWER/VOLUME RATIO
- ✓ SHOCK-PROOF COMPONENT
- ✓ FULLY CUSTOMIZABLE
- ✓ 3D STEP FILE AVAILABLE

ELECTRICAL CHARACTERISTICS

VOLTAGE INPUT (FROM PV PANEL)	500	VDC
VOLTAGE OUTPUT (TO GRID)	230	VAC
WORKING FREQUENCY	50-60	HZ
PWM FREQUENCY	UP TO 40	KHZ
MAX OUTPUT POWER	4000	W
EFFICIENCY	≥ 96	%
WEIGHT	1500	g
STORAGE CONDITIONS (RH ≤ 75%)	-20 ÷ +85	°C

DE-RATING POWER VS T_A

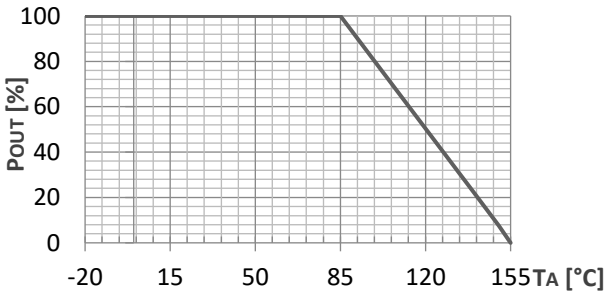

PHYSICAL PARAMETERS

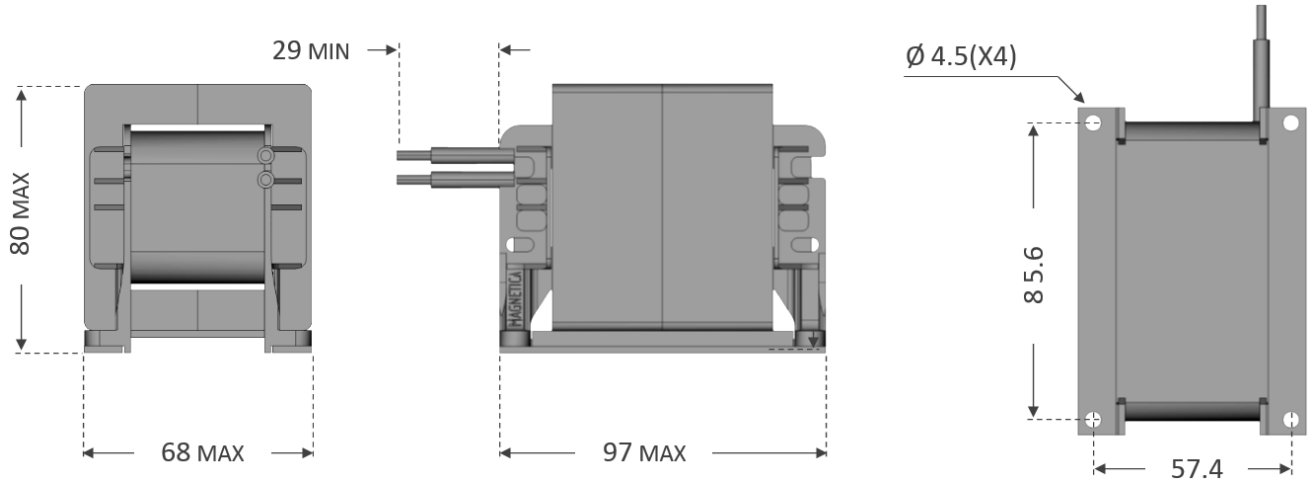

RoHS Compliant

2326 series

Phase shift Switch Mode Transformer
2÷5KW
Core size: 2xE70/33/32

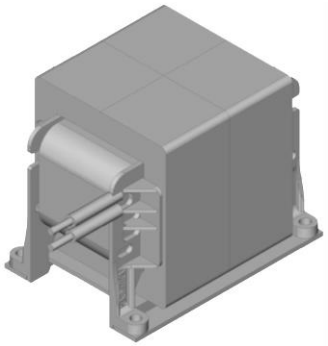

MAIN FEATURES

- ✓ LEAKAGE INDUCTANCE INTEGRATED
- ✓ REINFORCED INSULATION CLASS II (4KV)
- ✓ CLASS "F" INSULATION SYSTEM RECOGNIZED
- ✓ ACCORDING TO UL94-V0 LISTED MATERIALS
- ✓ ACCORDING TO EN 61558-2-16
- ✓ COMPATIBLE WITH ALL DIGITAL CONTROL DRIVERS AND BIDIRECTIONAL USE

DISTINGUISHING FEATURES

- ✓ SELF-LEAKAGE INDUCTANCE
- ✓ UP TO 5KW OF PEAK POWER
- ✓ HIGHEST POWER/VOLUME RATIO
- ✓ FULLY CUSTOMIZABLE
- ✓ 3D STEP FILE AVAILABLE

ELECTRICAL CHARACTERISTICS

VOLTAGE INPUT	120-450	VDC
VOLTAGE OUTPUT	12-120	VDC
WORKING FREQUENCY	30-300	KHZ
MAX OUTPUT POWER	3	KW
MAX OUTPUT PEAK POWER	5	KW
EFFICIENCY	UP TO 95	%
WEIGHT	1500	g
STORAGE CONDITIONS (RH ≤ 75%)	-20 ÷ +85	°C

DE-RATING POWER VS T_A

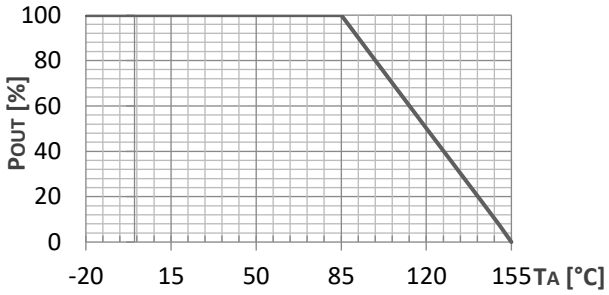

PHYSICAL PARAMETERS

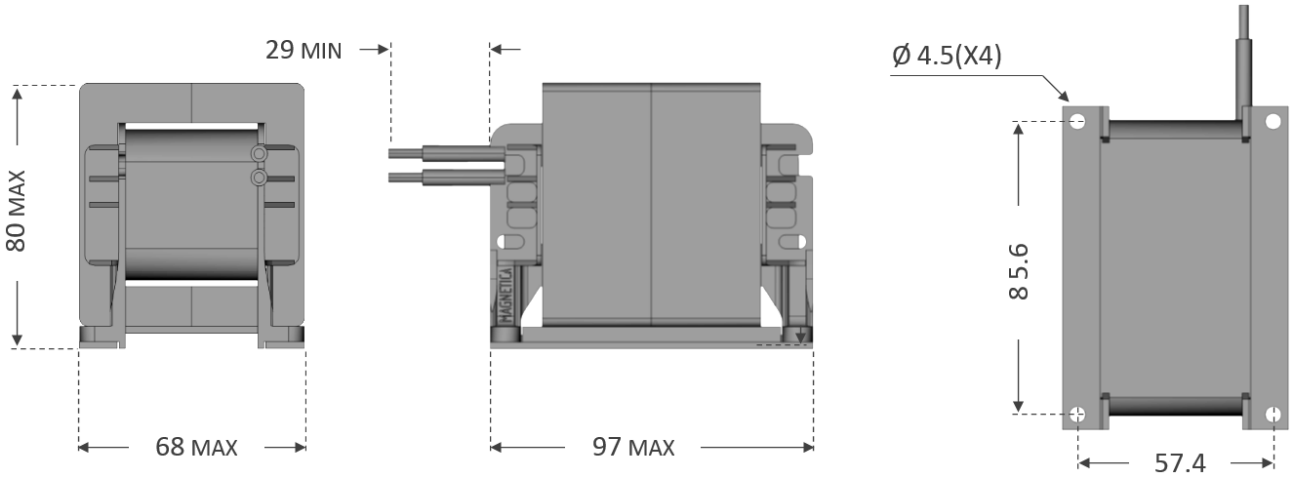

RoHS Compliant

Inverter

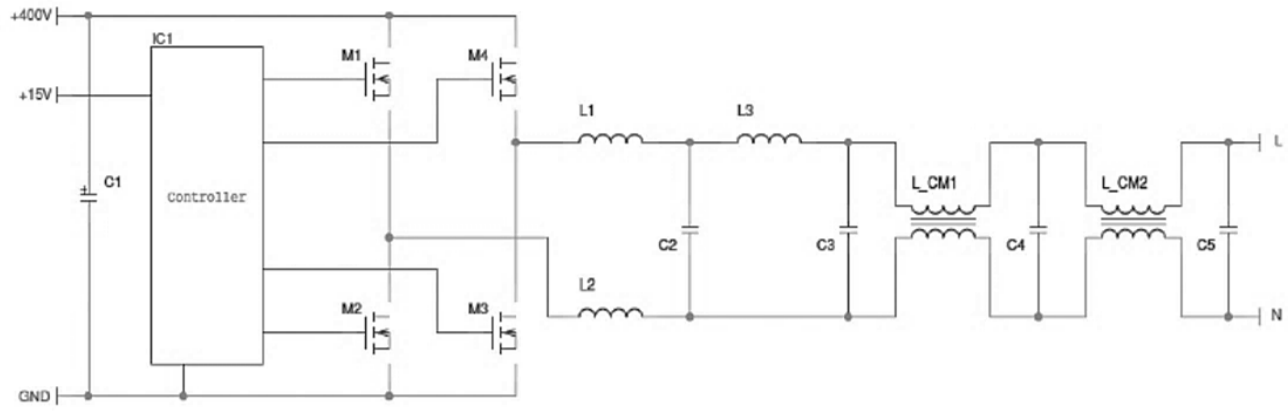

Main benefits

- High power density achievable
- Different FB control schemes available, MOSFET, IGBT or mixed.
- Low harmonic distortion to generate a true sinusoidal voltage
- Can share the same control IC used for the DC-DC front-end

Applications

- DC / AC stage in photovoltaic systems
- Inverter to be connected at line frequency to an electrical utility distribution network

AQ Magnetica's added value

- Grid-connected topology:
- Up to 16Arms for inverter LCL filter stage and coupling inductor
- Available in a compact double-E70 size
- Integrated aluminum heatsink to be possibly connected to chassis
- Same size also available for front-end DC-DC stage of PV systems, for either transformer in phase shifted converters or boost inductor in non-isolated flavors
- Recognized supplier for ST Microelectronics evaluation boards

2159 series

Boost Switch Mode Transformer
Core size: RM 14

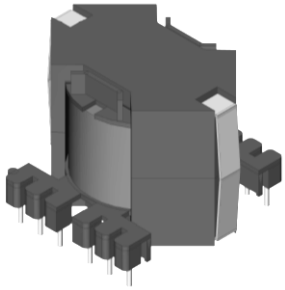

MAIN FEATURES

- ✓ REINFORCED INSULATION CLASS II IF NEEDED (4KV)
- ✓ CLASS "B" INSULATION SYSTEM RECOGNIZED
- ✓ ACCORDING TO UL94-V0 LISTED MATERIALS
- ✓ ACCORDING TO EN 61558-2-16

DISTINGUISHING FEATURES

- ✓ OFFICIAL TRANSFORMER FOR: **STEVAL-ISV003V1**
- ✓ AVAILABLE IN "F" CLASS INSULATION SYSTEM RECOGNIZED
- ✓ REALIZED WITH LOW LEAKAGE INDUCTANCE
- ✓ FULLY CUSTOMIZABLE
- ✓ 3D STEP FILE AVAILABLE

ELECTRICAL CHARACTERISTICS

VOLTAGE INPUT	20-50	VDC
VOLTAGE OUTPUT	UP TO 500	VDC
WORKING FREQUENCY	30-200	KHZ
MAX OUTPUT POWER	300*	W
EFFICIENCY	≥ 95	%
WEIGHT	70	g
STORAGE CONDITIONS (RH ≤ 75%)	-20 ÷ +85	°C

DE-RATING POWER VS T_A

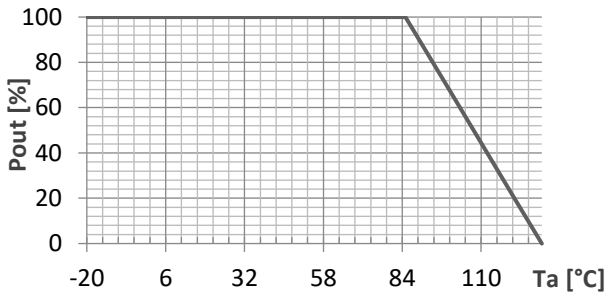

PHYSICAL PARAMETERS

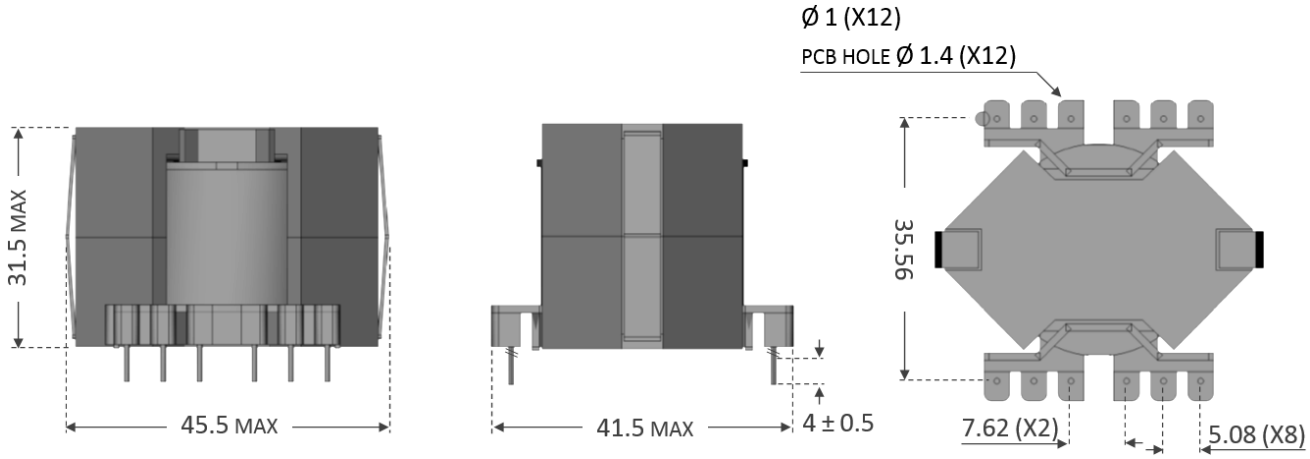

RoHS Compliant

2162 series

Boost converter inductor
Core size: PQ 32/30

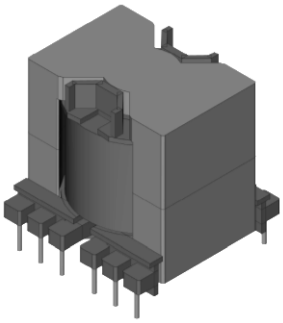

MAIN FEATURES

- ✓ REINFORCED INSULATION CLASS II IF NEEDED (4KV)
- ✓ CLASS "B" INSULATION SYSTEM RECOGNIZED
- ✓ ACCORDING TO UL94-V0 LISTED MATERIALS
- ✓ ACCORDING TO EN 61558-2-16

DISTINGUISHING FEATURES

- ✓ OFFICIAL TRANSFORMER FOR: **STEVAL-ISV003V1**
- ✓ AVAILABLE IN "F" CLASS INSULATION SYSTEM RECOGNIZED
- ✓ REALIZED WITH LOW LEAKAGE INDUCTANCE
- ✓ FULLY CUSTOMIZABLE
- ✓ 3D STEP FILE AVAILABLE

ELECTRICAL CHARACTERISTICS

VOLTAGE INPUT	20-50	VDC
VOLTAGE OUTPUT	UP TO 500	VDC
WORKING FREQUENCY	30-200	KHZ
MAX OUTPUT POWER	300	W
EFFICIENCY	≥ 95	%
WEIGHT	70	g
STORAGE CONDITIONS (RH ≤ 75%)	-20 ÷ +85	°C

DE-RATING POWER VS T_A

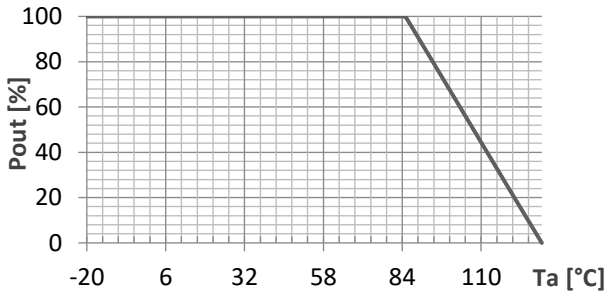

PHYSICAL PARAMETERS

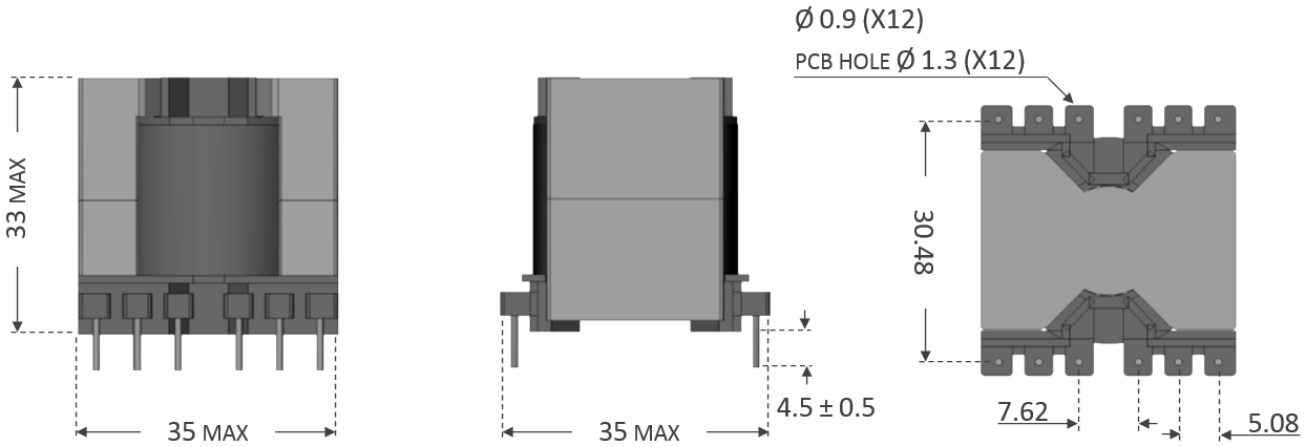

RoHS Compliant

2196 series

AC Line Filter Inductor
Core size: PQ 32/20

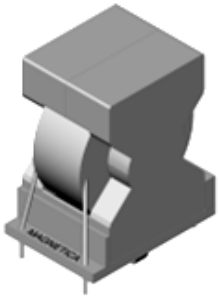

MAIN FEATURES

- ✓ HIGHEST POWER/VOLUME RATIO
- ✓ CLASS "B" INSULATION SYSTEM RECOGNIZED
- ✓ ACCORDING TO UL94-V0 LISTED MATERIALS
- ✓ ACCORDING TO EN 61558-2-16

DISTINGUISHING FEATURES

- ✓ OFFICIAL INDUCTOR FOR: **STEVAL-ISV003V1**
- ✓ AVAILABLE WITH LOW PARASITIC CAPACITANCE
- ✓ AVAILABLE IN "F" CLASS INSULATION SYSTEM RECOGNIZED
- ✓ FULLY CUSTOMIZABLE
- ✓ 3D STEP FILE AVAILABLE

ELECTRICAL CHARACTERISTICS

VOLTAGE INPUT BUS INVERTER	350-430	VDC
VOLTAGE OUTPUT	230-240	VAC
WORKING FREQUENCY	50-60	HZ
MAX OUTPUT POWER	250	W
EFFICIENCY	≥ 95	%
WEIGHT	60	g
STORAGE CONDITIONS (RH ≤ 75%)	-20 ÷ +85	°C

DE-RATING POWER VS T_A

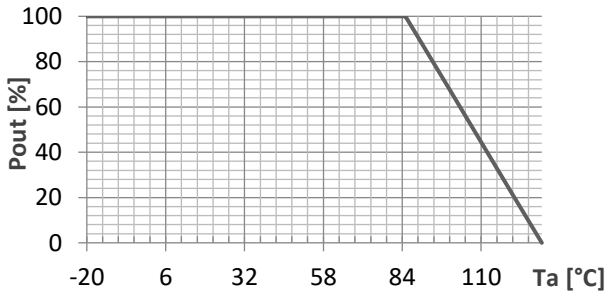

PHYSICAL PARAMETERS

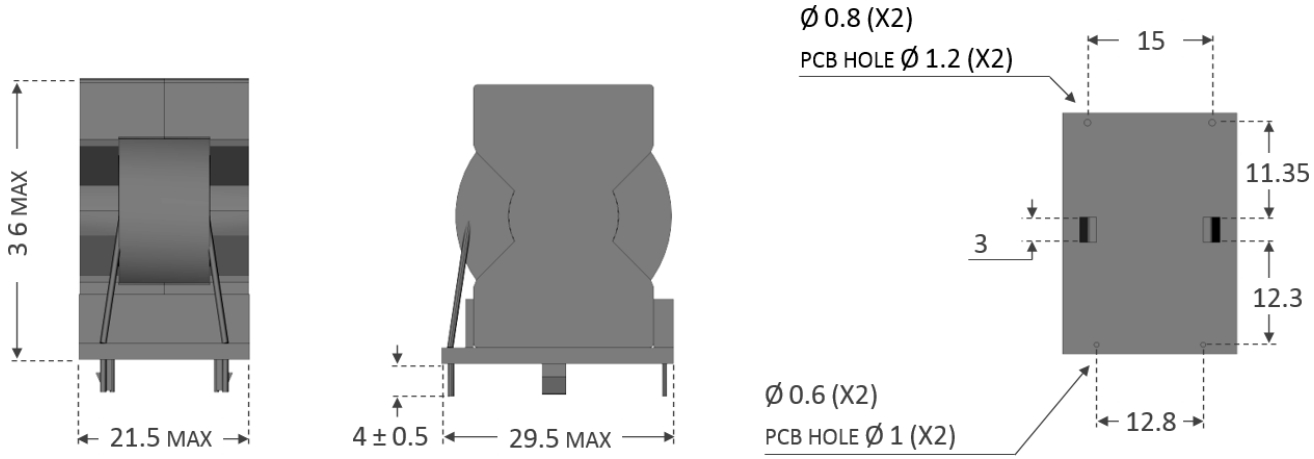

RoHS Compliant

Miscellaneous

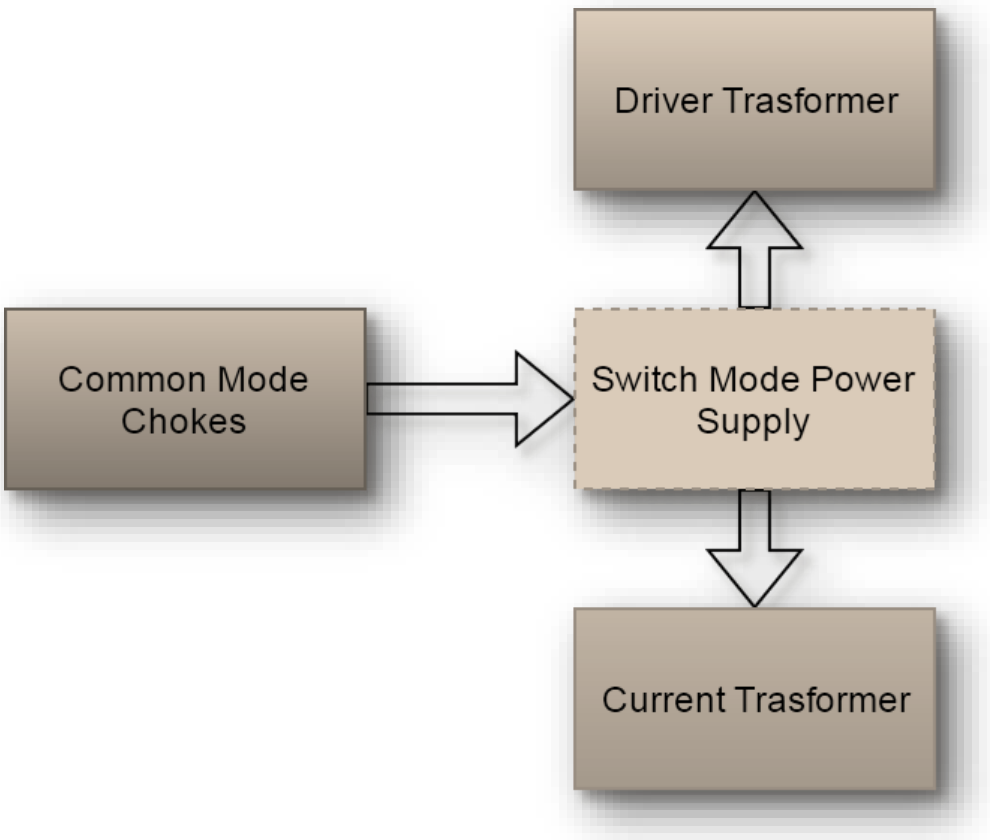

Application:

- Low power, high integration battery chargers
- Auxiliary & industrial power supply
- Adapters
- Offline LED drivers

Features:

	Common Mode Chokes	Driver Transformer	Current Transformer
High insertion loss	X		
Rating up to 40A	X		
Rating up to 100A			X
High dVdT		X	
High dIdT			X
PCB mounting	X	X	X
Flying wires	X	X	X

1226 series

Current transformer
Core size: E19/5

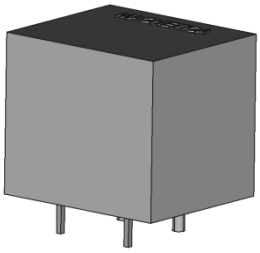

MAIN FEATURES

- ✓ TRANSFORMER SUITABLE TO CURRENT MEASUREMENT
- ✓ REINFORCED INSULATION CLASS II (4KV)
- ✓ CLASS "B" INSULATION SYSTEM RECOGNIZED
- ✓ ACCORDING TO UL94-V0 LISTED MATERIALS
- ✓ ACCORDING TO EN 61558-2-16

DISTINGUISHING FEATURES

- ✓ AVAILABLE IN CLASS "F" INSULATION SYSTEM RECOGNIZED
- ✓ FULLY CUSTOMIZABLE
- ✓ 3D STEP FILE AVAILABLE

ELECTRICAL CHARACTERISTICS

CURRENT PEAK MAX	50	A
WORKING FREQUENCY	5-200	KHZ
EFFICIENCY	≥ 80	%
WEIGHT	10	g
STORAGE CONDITIONS (RH ≤ 75%)	-20 ÷ +85	°C

DE-RATING POWER VS T_A

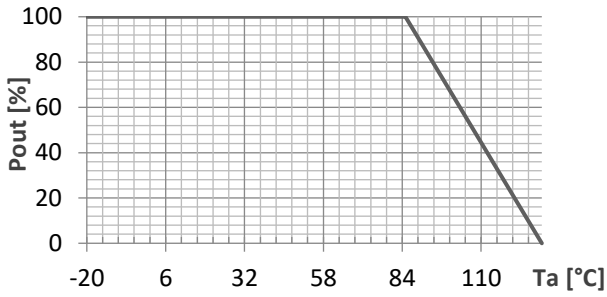

PHYSICAL PARAMETERS

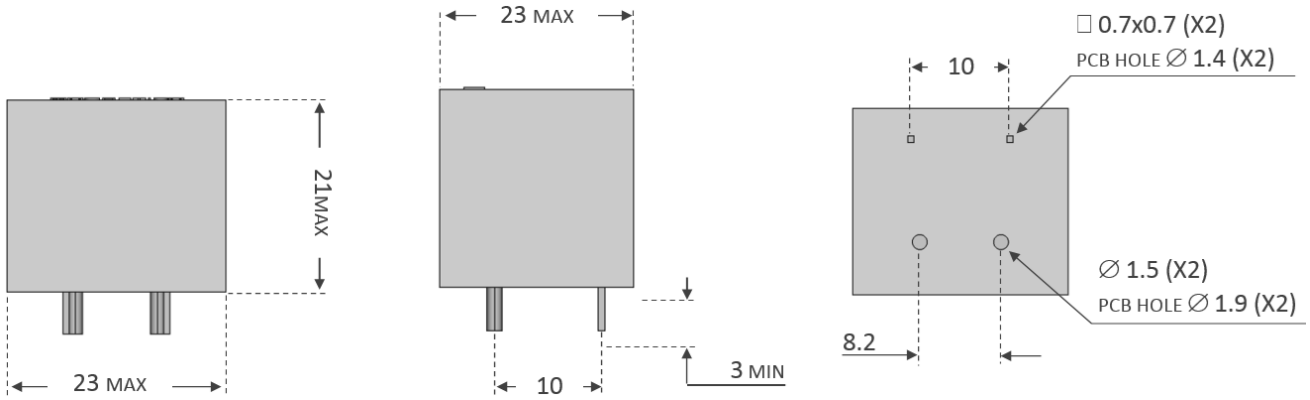

RoHS Compliant

1765 series

Current transformer
Core size: E19/5

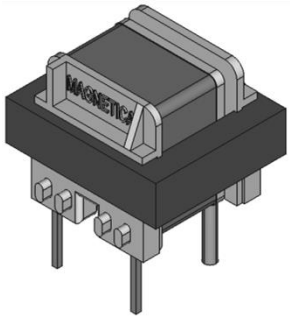

MAIN FEATURES

- ✓ TRANSFORMER SUITABLE TO CURRENT MEASUREMENT
- ✓ REINFORCED INSULATION CLASS II (4KV)
- ✓ CLASS "B" INSULATION SYSTEM RECOGNIZED
- ✓ ACCORDING TO UL94-V0 LISTED MATERIALS
- ✓ ACCORDING TO EN 61558-2-16

DISTINGUISHING FEATURES

- ✓ TRANSFORMER SUITABLE TO CURRENT MEASUREMENT
- ✓ REINFORCED INSULATION CLASS II (4KV)
- ✓ CLASS "B" INSULATION SYSTEM RECOGNIZED
- ✓ ACCORDING TO UL94-V0 LISTED MATERIALS
- ✓ ACCORDING TO EN 61558-2-16

ELECTRICAL CHARACTERISTICS

CURRENT PEAK MAX	50	A
WORKING FREQUENCY	5-200	KHZ
EFFICIENCY	≥ 80	%
WEIGHT	10	g
STORAGE CONDITIONS (RH ≤ 75%)	-20 ÷ +85	°C

DE-RATING POWER VS T_A

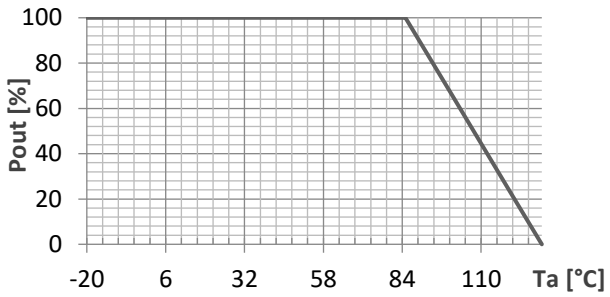

PHYSICAL PARAMETERS

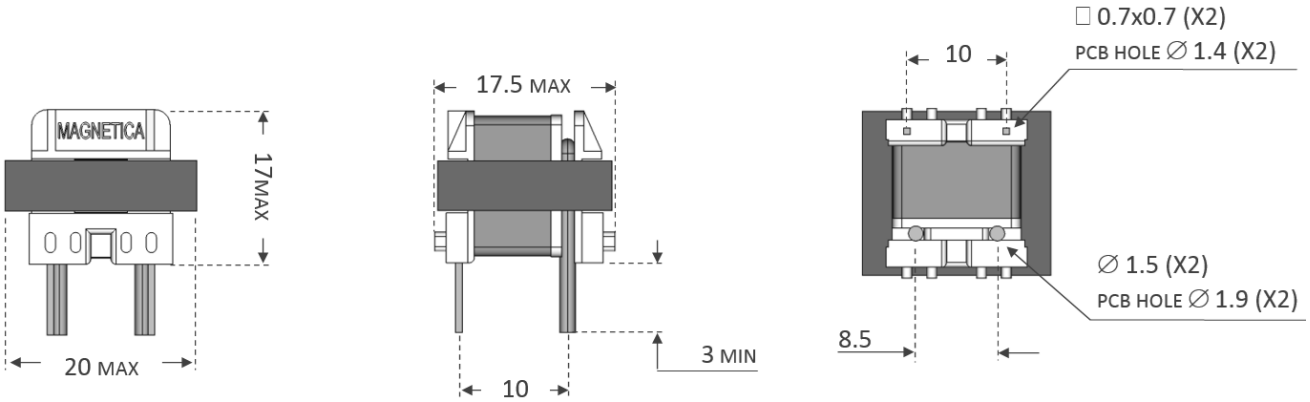

RoHS Compliant

1139 series

Driver transformer
Core size: E19/5

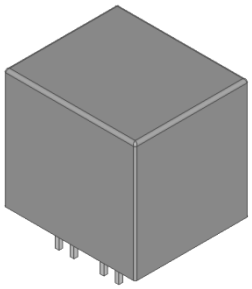

MAIN FEATURES

- ✓ TRANSFORMER SUITABLE TO DRIVE MOSFET/TRANSISTORS
- ✓ REINFORCED INSULATION CLASS II (4KV)
- ✓ CLASS "B" INSULATION SYSTEM RECOGNIZED
- ✓ ACCORDING TO UL94-V0 LISTED MATERIALS
- ✓ ACCORDING TO EN 61558-2-16

DISTINGUISHING FEATURES

- ✓ AVAILABLE IN CLASS "F" INSULATION SYSTEM RECOGNIZED
- ✓ FULLY CUSTOMIZABLE
- ✓ 3D STEP FILE AVAILABLE

ELECTRICAL CHARACTERISTICS

VOLTAGE INPUT	0-100	VDC
VOLTAGE OUTPUT	0-100	VDC
WORKING FREQUENCY	50-200	KHZ
EFFICIENCY	≥ 80	%
WEIGHT	10	g
STORAGE CONDITIONS (RH ≤ 75%)	-20 ÷ +85	°C

DE-RATING POWER VS T_A

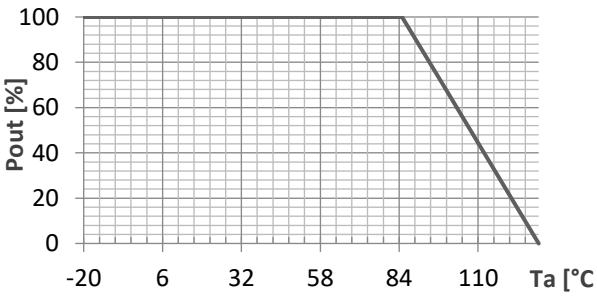

PHYSICAL PARAMETERS

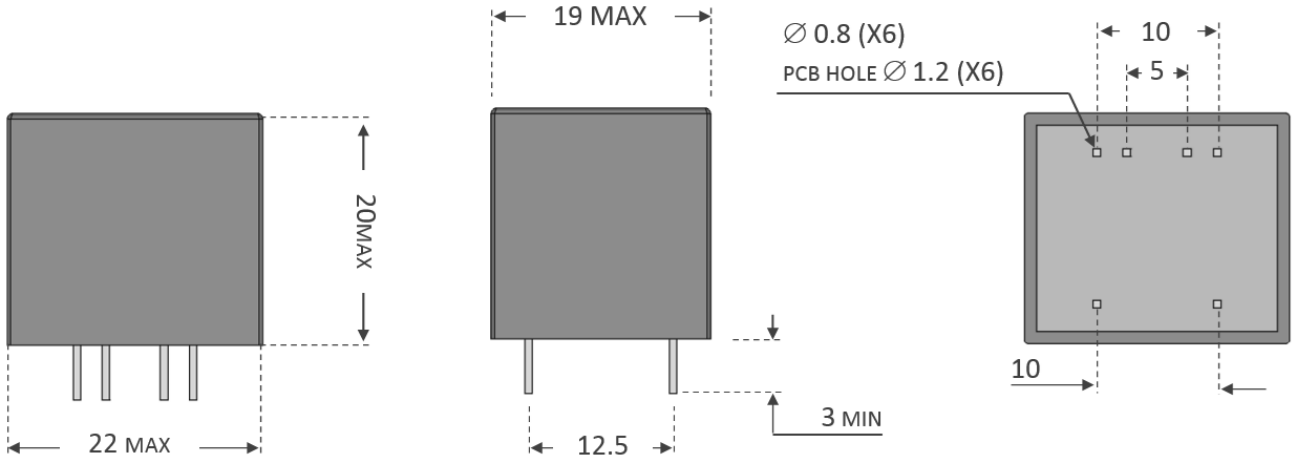

RoHS Compliant

1605 series

Driver transformer
Core size: E19/5

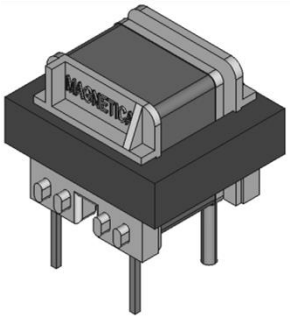

MAIN FEATURES

- ✓ TRANSFORMER SUITABLE TO DRIVE MOSFET/TRANSISTORS
- ✓ REINFORCED INSULATION CLASS II (4KV)
- ✓ CLASS "B" INSULATION SYSTEM RECOGNIZED
- ✓ ACCORDING TO UL94-V0 LISTED MATERIALS
- ✓ ACCORDING TO EN 61558-2-16

DISTINGUISHING FEATURES

- ✓ AVAILABLE IN CLASS "F" INSULATION SYSTEM RECOGNIZED
- ✓ FULLY CUSTOMIZABLE
- ✓ 3D STEP FILE AVAILABLE

ELECTRICAL CHARACTERISTICS

VOLTAGE INPUT	0-100	VDC
VOLTAGE OUTPUT	0-100	VDC
WORKING FREQUENCY	50-200	KHZ
EFFICIENCY	≥ 80	%
WEIGHT	10	g
STORAGE CONDITIONS (RH ≤ 75%)	-20 ÷ +85	°C

DE-RATING POWER VS T_A

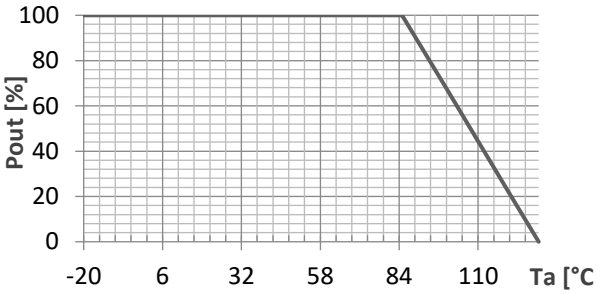

PHYSICAL PARAMETERS

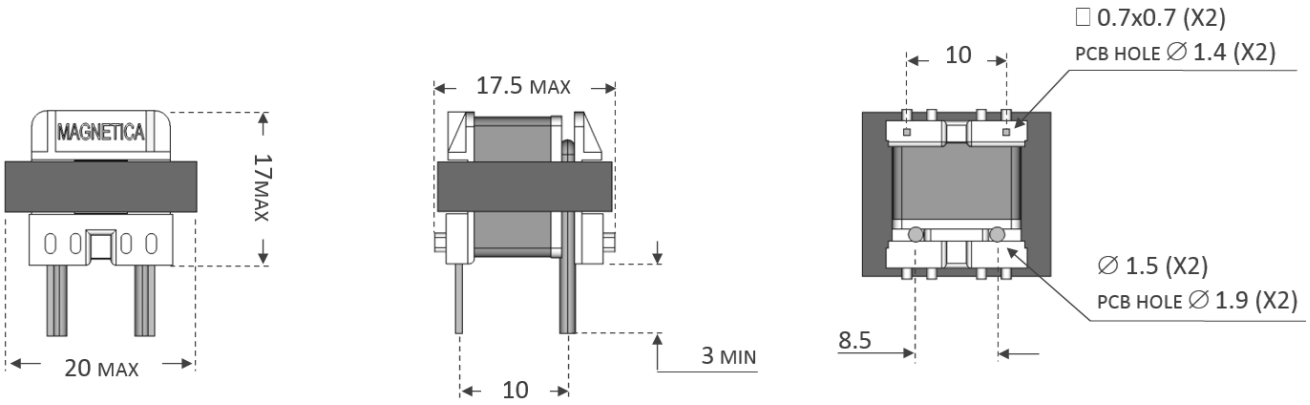

RoHS Compliant

1045 series

Common mode chokes
Core size: E 20/6

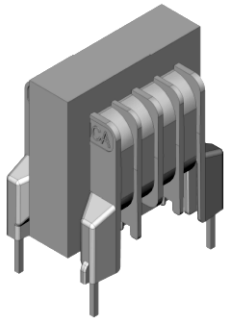

MAIN FEATURES

- ✓ DIELECTRIC RATING OF 1500 VAC
- ✓ CLASS "B" INSULATION SYSTEM RECOGNIZED
- ✓ ACCORDING TO UL94-V0 LISTED MATERIALS
- ✓ ACCORDING TO EN55022/EN55015 STANDARDS
- ✓ COMPACT SWITCH-MODE POWER APPLICATIONS
- ✓ APPLICATIONS:
  - MAIN FILTERS
  - LED LIGHTING
  - ELECTRONIC BALLAST
  - AUTOMOTIVE APPLICATIONS
  - AUTOMATION TECHNOLOGIES
  - WHITE GOODS

DISTINGUISHING FEATURES

- ✓ HIGH SUPPRESSION OF COMMON MODE NOISE AND DIFFERENTIAL MODE NOISE REDUCE THE NUMBER OF COMPONENTS
- ✓ LOW PARASITIC CAPACITANCE
- ✓ 4 SECTION WINDINGS
- ✓ COMPACT SWITCH MODE POWER SUPPLY
- ✓ FULLY CUSTOMIZABLE
- ✓ 3D STEP FILE AVAILABLE

ELECTRICAL CHARACTERISTICS

RATED VOLTAGE	300	VAC
RATED CURRENT @ 30°C (50÷60HZ)	UP TO 3	A
INDUCTANCE (SPECIFIED PER WINDING)	UP TO 150	mH
WEIGHT	20	g
STORAGE CONDITIONS (RH ≤ 75%)	-20 ÷ +85	°C

DE-RATING POWER VS TA

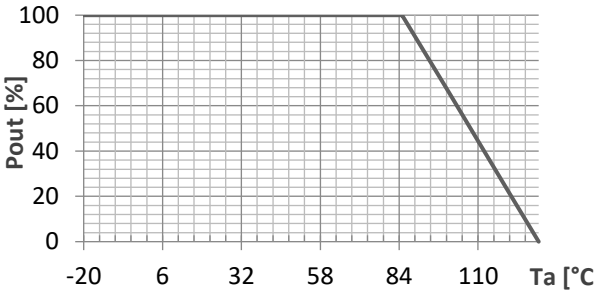

PHYSICAL PARAMETERS

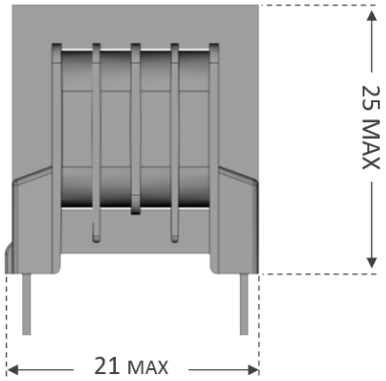

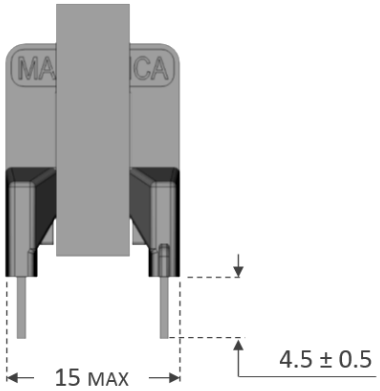

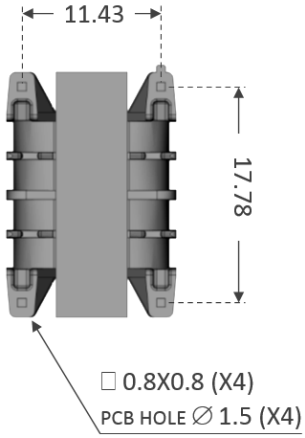

RoHS Compliant

1389 series

Common mode chokes
Core size: R 36/16

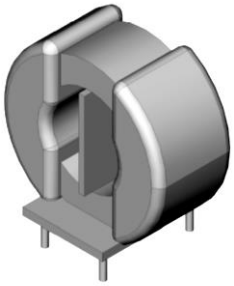

MAIN FEATURES

- ✓ DIELECTRIC RATING OF 1500 VAC
- ✓ CLASS "B" INSULATION SYSTEM RECOGNIZED
- ✓ ACCORDING TO UL94-V0 LISTED MATERIALS
- ✓ ACCORDING TO EN55022/EN55015 STANDARDS
- ✓ SOLID BASE FOR STABLE VERTICAL MOUNTING
- ✓ APPLICATIONS:
  - MAIN FILTERS
  - PHOTOVOLTAIC INVERTERS
  - AUTOMOTIVE APPLICATIONS
  - AUTOMATION TECHNOLOGIES
  - WHITE GOODS

DISTINGUISHING FEATURES

- ✓ EXCELLENT EMI SUPPRESSION
- ✓ WIDE RANGE OF VALUES AND CURRENT RATINGS
- ✓ FULLY CUSTOMIZABLE
- ✓ 3D STEP FILE AVAILABLE

ELECTRICAL CHARACTERISTICS

RATED VOLTAGE	UP TO 300	VAC
RATED CURRENT @ 30°C (50÷60HZ)	UP TO 20	A
INDUCTANCE (SPECIFIED PER WINDING)	UP TO 20	mH
WEIGHT	100	g
STORAGE CONDITIONS (RH ≤ 75%)	-20 ÷ +85	°C

DE-RATING POWER VS T_A

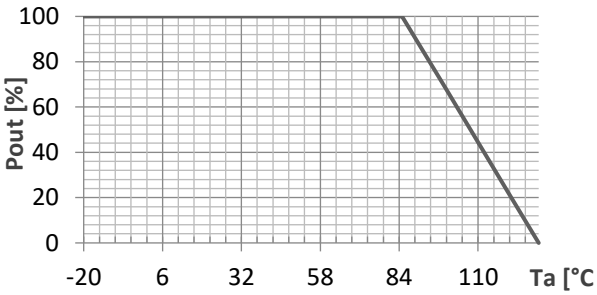

PHYSICAL PARAMETERS

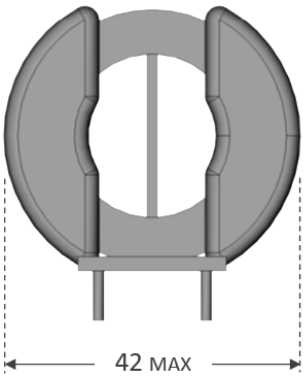

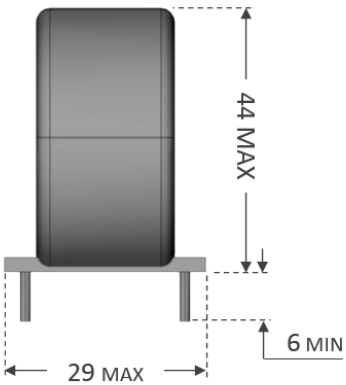

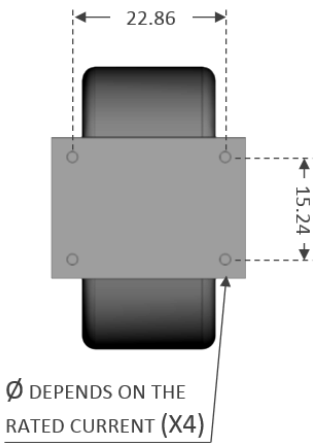

RoHS Compliant

1770 series

Common mode chokes
Core size: E 13/4

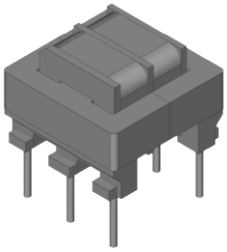

MAIN FEATURES

- ✓ DIELECTRIC RATING OF 1500 VAC
- ✓ CLASS "B" INSULATION SYSTEM RECOGNIZED
- ✓ ACCORDING TO UL94-V0 LISTED MATERIALS
- ✓ ACCORDING TO EN55022/EN55015 STANDARDS
- ✓ COMPACT SWITCH-MODE POWER APPLICATIONS
- ✓ APPLICATIONS:
  - MAIN FILTERS
  - LED LIGHTING
  - ELECTRONIC BALLAST
  - AUTOMOTIVE APPLICATIONS
  - AUTOMATION TECHNOLOGIES
  - WHITE GOODS

DISTINGUISHING FEATURES

- ✓ HIGH SUPPRESSION OF COMMON MODE NOISE AND DIFFERENTIAL MODE NOISE REDUCE THE NUMBER OF COMPONENTS
- ✓ LOW PARASITIC CAPACITANCE
- ✓ COMPACT SWITCH MODE POWER SUPPLY
- ✓ FULLY CUSTOMIZABLE
- ✓ 3D STEP FILE AVAILABLE

ELECTRICAL CHARACTERISTICS

RATED VOLTAGE	300	VAC
RATED CURRENT @ 30°C (50÷60HZ)	UP TO 1	A
INDUCTANCE (SPECIFIED PER WINDING)	UP TO 50	mH
WEIGHT	6	g
STORAGE CONDITIONS (RH ≤ 75%)	-20 ÷ +85	°C

DE-RATING POWER VS T_A

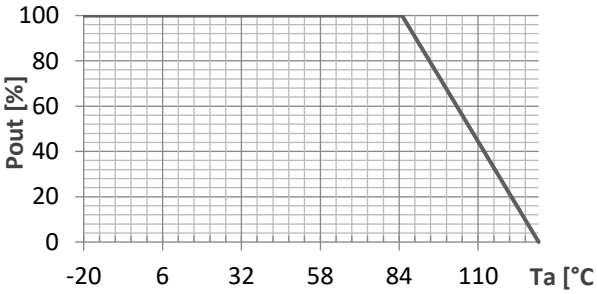

PHYSICAL PARAMETERS

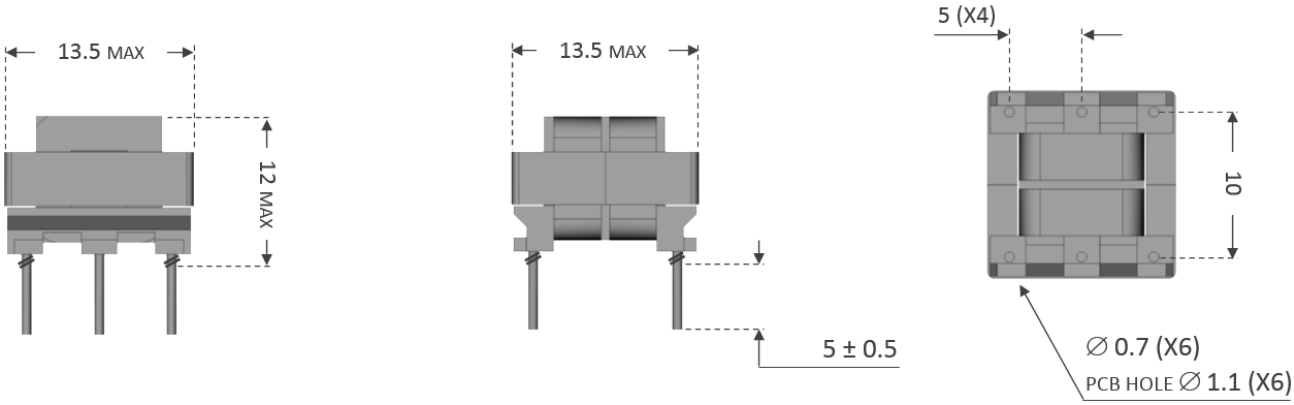

RoHS Compliant

1942 series

Common mode chokes
Core size: E 20/6

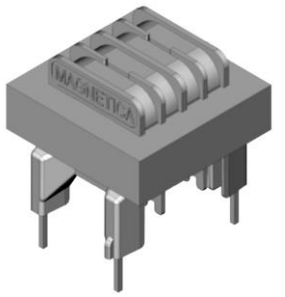

MAIN FEATURES

- ✓ DIELECTRIC RATING OF 1500 VAC
- ✓ CLASS "B" INSULATION SYSTEM RECOGNIZED
- ✓ ACCORDING TO UL94-V0 LISTED MATERIALS
- ✓ ACCORDING TO EN55022/EN55015 STANDARDS
- ✓ COMPACT SWITCH-MODE POWER APPLICATIONS
- ✓ APPLICATIONS:
  - MAIN FILTERS
  - LED LIGHTING
  - ELECTRONIC BALLAST
  - AUTOMOTIVE APPLICATIONS
  - AUTOMATION TECHNOLOGIES
  - WHITE GOODS

DISTINGUISHING FEATURES

- ✓ HIGH SUPPRESSION OF COMMON MODE NOISE AND DIFFERENTIAL MODE NOISE REDUCE THE NUMBER OF COMPONENTS
- ✓ LOW PARASITIC CAPACITANCE
- ✓ 4 SECTION WINDINGS
- ✓ COMPACT SWITCH MODE POWER SUPPLY
- ✓ FULLY CUSTOMIZABLE
- ✓ 3D STEP FILE AVAILABLE

ELECTRICAL CHARACTERISTICS

RATED VOLTAGE	300	VAC
RATED CURRENT @ 30°C (50÷60HZ)	UP TO 3	A
INDUCTANCE (SPECIFIED PER WINDING)	UP TO 150	mH
WEIGHT	15	g
STORAGE CONDITIONS (RH ≤ 75%)	-20 ÷ +85	°C

DE-RATING POWER VS T_A

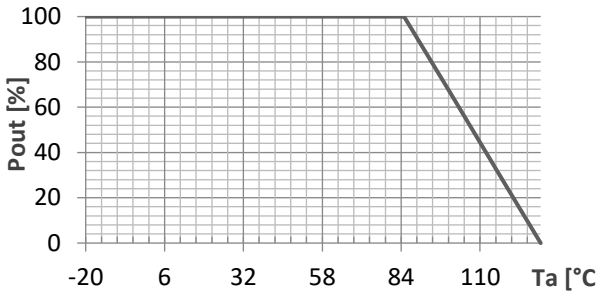

PHYSICAL PARAMETERS

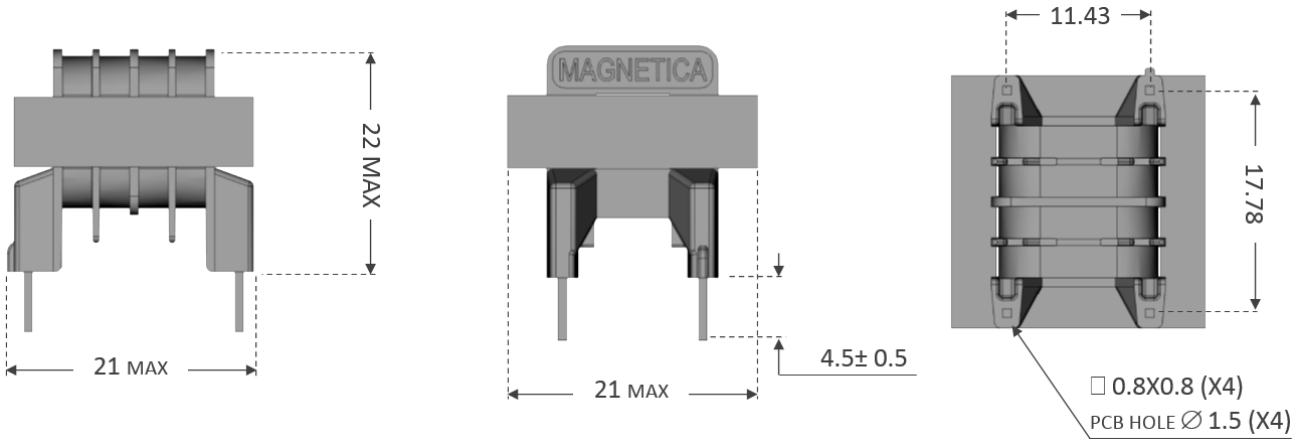

RoHS Compliant

2019 series

Common mode chokes
Core size: R 25/10

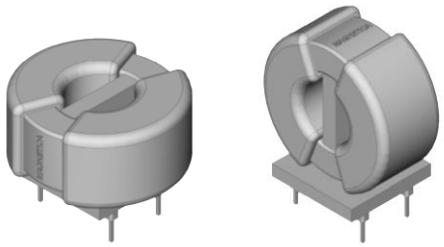

MAIN FEATURES

- ✓ DIELECTRIC RATING OF 1500 VAC
- ✓ CLASS "B" INSULATION SYSTEM RECOGNIZED
- ✓ ACCORDING TO UL94-V0 LISTED MATERIALS
- ✓ ACCORDING TO EN55022/EN55015 STANDARDS
- ✓ COMPACT SWITCH-MODE POWER APPLICATIONS
- ✓ APPLICATIONS:
  - MAIN FILTERS
  - LED LIGHTING
  - ELECTRONIC BALLAST
  - AUTOMOTIVE APPLICATIONS
  - AUTOMATION TECHNOLOGIES
  - WHITE GOODS

DISTINGUISHING FEATURES

- ✓ HIGH SUPPRESSION OF COMMON MODE NOISE AND DIFFERENTIAL MODE NOISE REDUCE THE NUMBER OF COMPONENTS
- ✓ LOW PARASITIC CAPACITANCE
- ✓ COMPACT SWITCH MODE POWER SUPPLY
- ✓ FULLY CUSTOMIZABLE
- ✓ 3D STEP FILE AVAILABLE

ELECTRICAL CHARACTERISTICS

RATED VOLTAGE	300	VAC
RATED CURRENT @ 30°C (50÷60HZ)	UP TO 3	A
INDUCTANCE (SPECIFIED PER WINDING)	UP TO 50	mH
WEIGHT	25	g
STORAGE CONDITIONS (RH ≤ 75%)	-20 ÷ +85	°C

DE-RATING POWER VS T_A

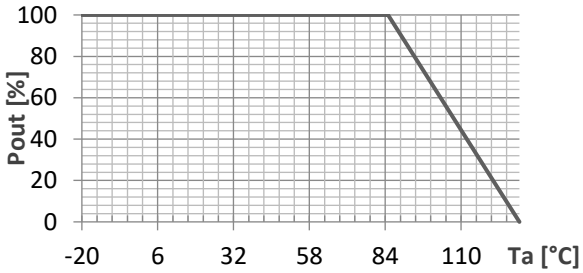

PHYSICAL PARAMETERS

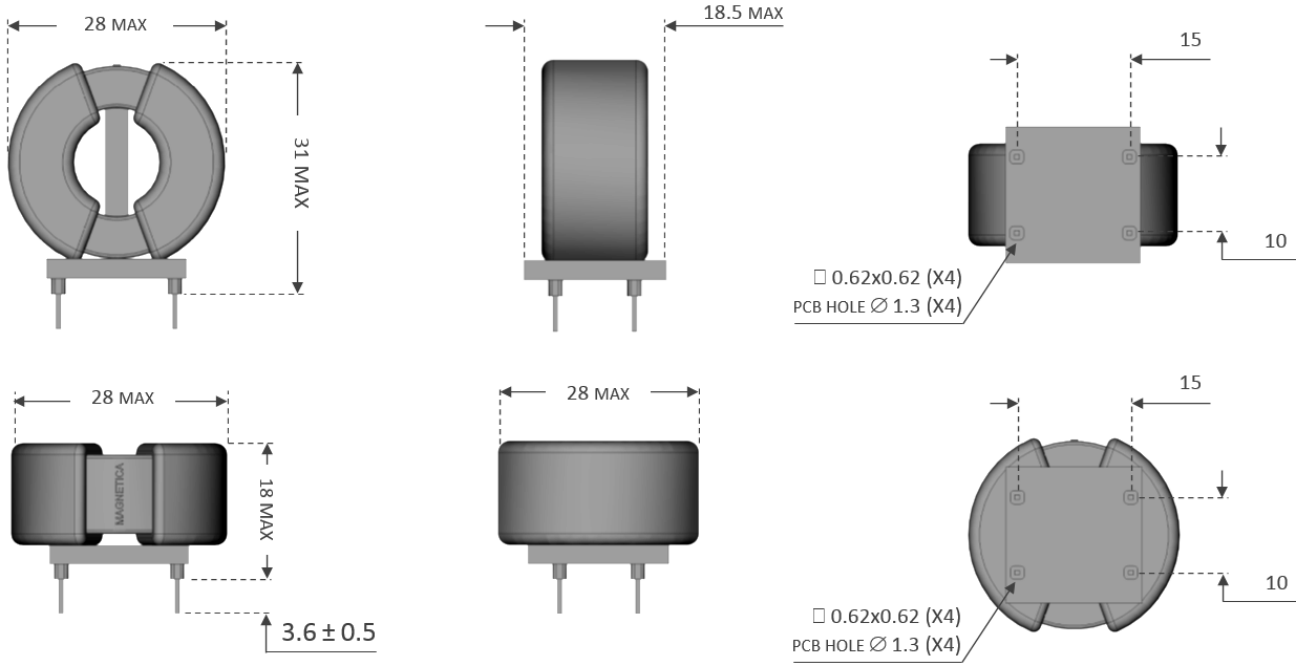

RoHS Compliant

2105 series

Common mode chokes
Core size: R 50/16

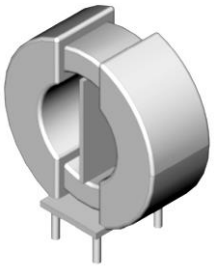

MAIN FEATURES

- ✓ DIELECTRIC RATING OF 1500 VAC
- ✓ CLASS "B" INSULATION SYSTEM RECOGNIZED
- ✓ ACCORDING TO UL94-V0 LISTED MATERIALS
- ✓ ACCORDING TO EN55022/EN55015 STANDARDS
- ✓ COMPACT SWITCH-MODE POWER APPLICATIONS
- ✓ APPLICATIONS:
  - PHOTOVOLTAIC APPLICATIONS
  - MAIN FILTERS
  - AUTOMOTIVE AND AUTOMATION TECHNOLOGIES
  - WHITE GOODS

DISTINGUISHING FEATURES

- ✓ HIGH SUPPRESSION OF COMMON MODE NOISE AND DIFFERENTIAL MODE NOISE
- ✓ FULLY CUSTOMIZABLE
- ✓ 3D STEP FILE AVAILABLE

ELECTRICAL CHARACTERISTICS

RATED VOLTAGE	300	VAC
RATED CURRENT @ 30°C (50÷60HZ)	UP TO 40	A
INDUCTANCE (SPECIFIED PER WINDING)	UP TO 200	mH
WEIGHT	150	g
STORAGE CONDITIONS (RH ≤ 75%)	-20 ÷ +85	°C

DE-RATING POWER VS T_A

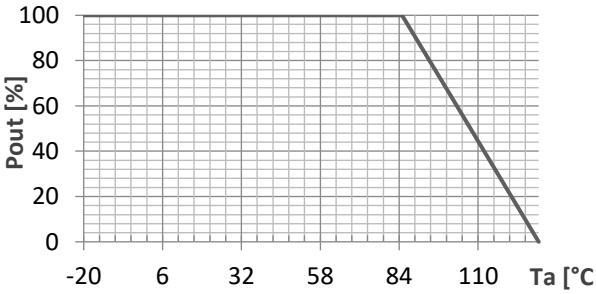

PHYSICAL PARAMETERS

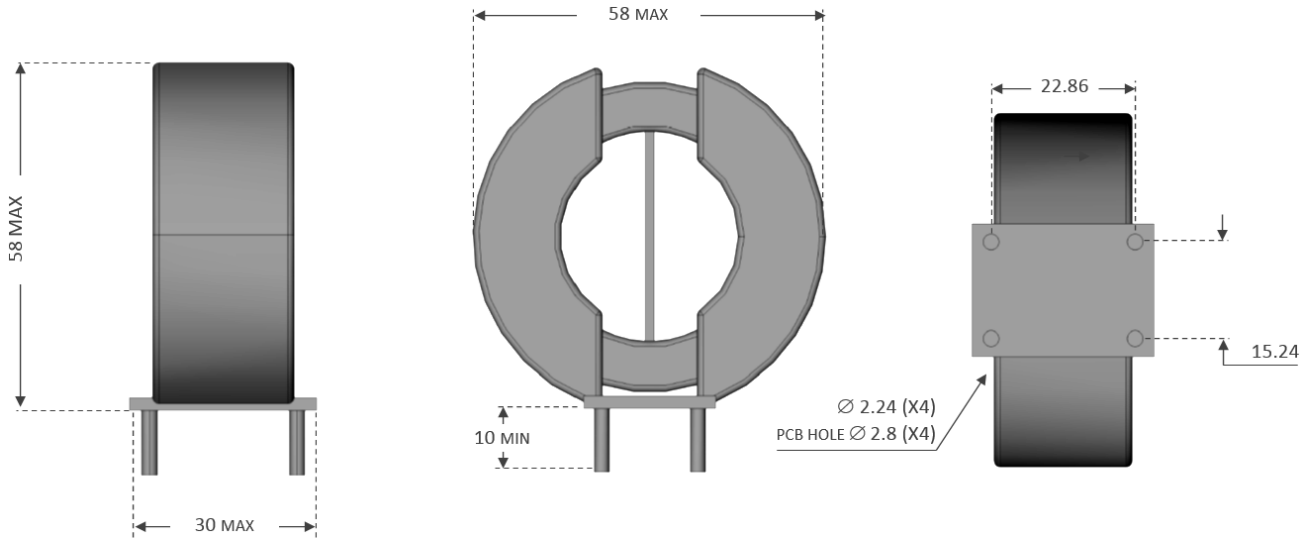

RoHS Compliant

2201 series

Three phase common mode chokes
Core size: R 18/7

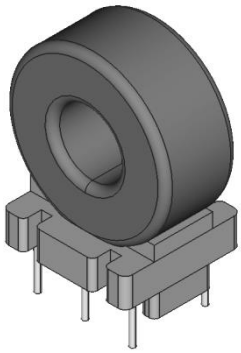

MAIN FEATURES

- ✓ DIELECTRIC RATING OF 1500 VAC
- ✓ CLASS "B" INSULATION SYSTEM RECOGNIZED
- ✓ ACCORDING TO UL94-V0 LISTED MATERIALS
- ✓ ACCORDING TO EN55022/EN55015 STANDARDS
- ✓ COMPACT SWITCH-MODE POWER APPLICATIONS
- ✓ APPLICATIONS:
  - THREE-PHASE MOTOR
  - MAIN FILTERS
  - AUTOMOTIVE AND AUTOMATION TECHNOLOGIES

DISTINGUISHING FEATURES

- ✓ HIGH SUPPRESSION OF COMMON MODE NOISE AND DIFFERENTIAL MODE NOISE
- ✓ FULLY CUSTOMIZABLE
- ✓ 3D STEP FILE AVAILABLE

ELECTRICAL CHARACTERISTICS

RATED VOLTAGE	400	VAC
RATED CURRENT @ 30°C (50÷60HZ)	UP TO 5	A
INDUCTANCE (SPECIFIED PER WINDING)	UP TO 10	mH
WEIGHT	10	g
STORAGE CONDITIONS (RH ≤ 75%)	-20 ÷ +85	°C

DE-RATING POWER VS T_A

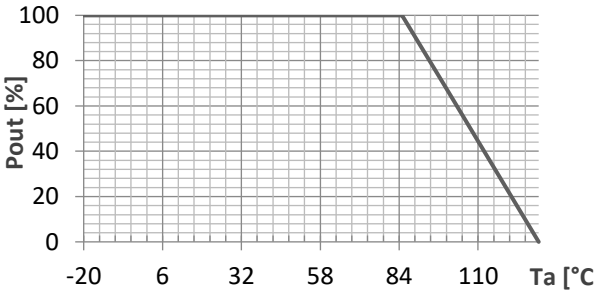

PHYSICAL PARAMETERS

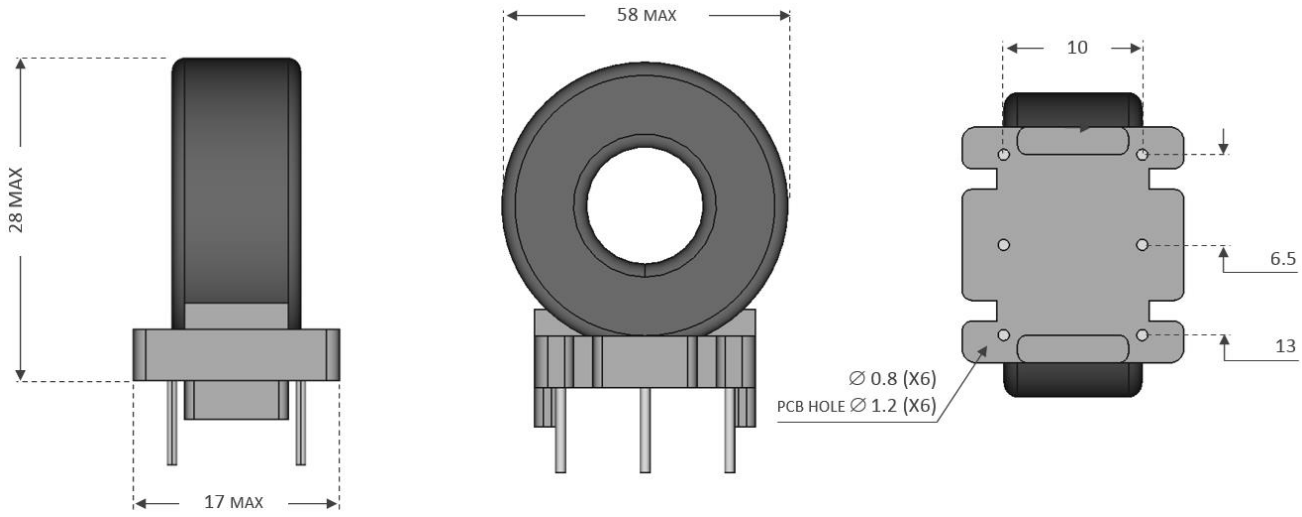

RoHS Compliant

2234 series

Common mode chokes
Core size: UU 9.8

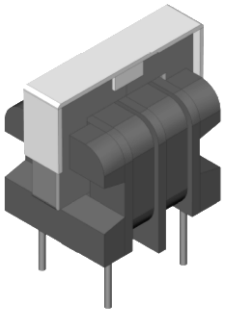

MAIN FEATURES

- ✓ DIELECTRIC RATING OF 1500 VAC
- ✓ CLASS "B" INSULATION SYSTEM RECOGNIZED
- ✓ ACCORDING TO UL94-V0 LISTED MATERIALS
- ✓ ACCORDING TO EN55022/EN55015 STANDARDS
- ✓ COMPACT SWITCH-MODE POWER APPLICATIONS
- ✓ APPLICATIONS:
  - MAIN FILTERS
  - LED LIGHTING
  - ELECTRONIC BALLAST
  - AUTOMOTIVE AND AUTOMATION TECHNOLOGIES
  - WHITE GOODS

DISTINGUISHING FEATURES

- ✓ HIGH SUPPRESSION OF COMMON MODE NOISE AND DIFFERENTIAL MODE NOISE REDUCE NUMBER OF COMPONENTS
- ✓ LOW PARASITIC CAPACITANCE
- ✓ AVAILABLE ALSO IN HORIZONTAL POSITION
- ✓ COMPACT SWITCH MODE POWER SUPPLY
- ✓ FULLY CUSTOMIZABLE
- ✓ 3D STEP FILE AVAILABLE

ELECTRICAL CHARACTERISTICS

RATED VOLTAGE	300	VAC
RATED CURRENT @ 30°C (50÷60HZ)	UP TO 1	A
INDUCTANCE (SPECIFIED PER WINDING)	UP TO 50	mH
WEIGHT	2	g
STORAGE CONDITIONS (RH ≤ 75%)	-20 ÷ +85	°C

DE-RATING POWER VS T_A

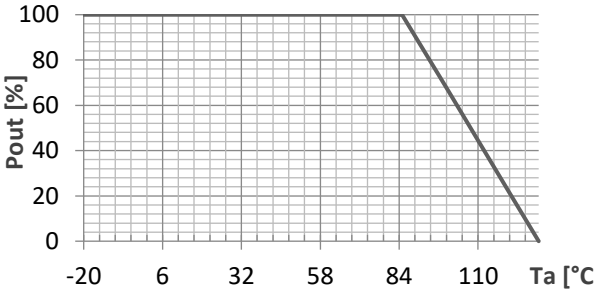

PHYSICAL PARAMETERS

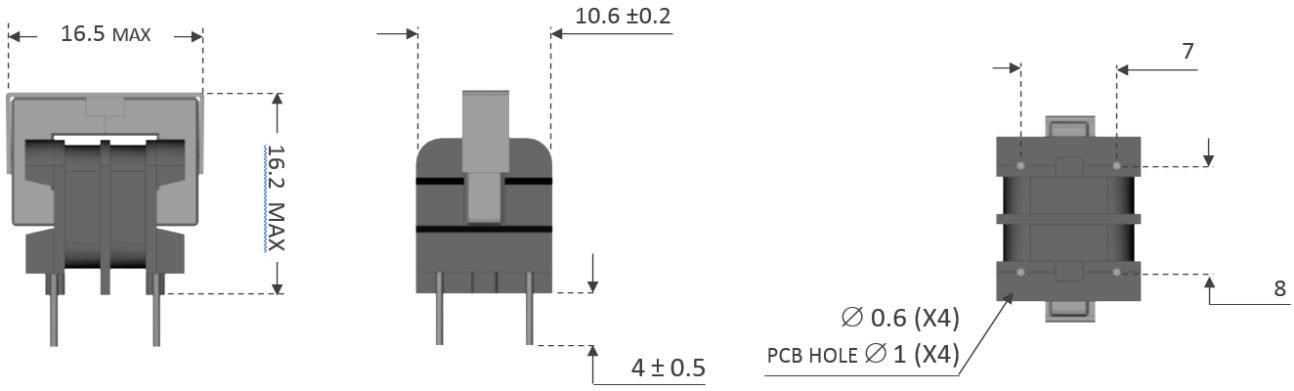

RoHS Compliant

2258 series

Common mode chokes
Core size: UU 15.7

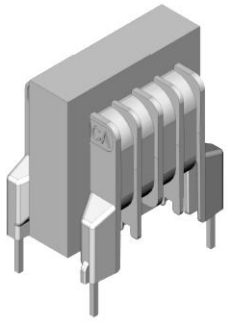

MAIN FEATURES

- ✓ DIELECTRIC RATING OF 1500 VAC
- ✓ CLASS "B" INSULATION SYSTEM RECOGNIZED
- ✓ ACCORDING TO UL94-V0 LISTED MATERIALS
- ✓ ACCORDING TO EN55022/EN55015 STANDARDS
- ✓ COMPACT SWITCH-MODE POWER APPLICATIONS
- ✓ APPLICATIONS:
  - MAIN FILTERS
  - LED LIGHTING
  - ELECTRONIC BALLAST
  - AUTOMOTIVE AND AUTOMATION TECHNOLOGIES
  - WHITE GOODS

DISTINGUISHING FEATURES

- ✓ HIGH SUPPRESSION OF COMMON MODE NOISE AND DIFFERENTIAL MODE NOISE REDUCE THE NUMBER OF COMPONENTS
- ✓ LOW PARASITIC CAPACITANCE
- ✓ COMPACT SWITCH MODE POWER SUPPLY
- ✓ FULLY CUSTOMIZABLE
- ✓ 3D STEP FILE AVAILABLE

ELECTRICAL CHARACTERISTICS

RATED VOLTAGE	300	VAC
RATED CURRENT @ 30°C (50÷60HZ)	UP TO 2	A
INDUCTANCE (SPECIFIED PER WINDING)	UP TO 50	mH
WEIGHT	18	g
STORAGE CONDITIONS (RH ≤ 75%)	-20 ÷ +85	°C

DE-RATING POWER VS T_A

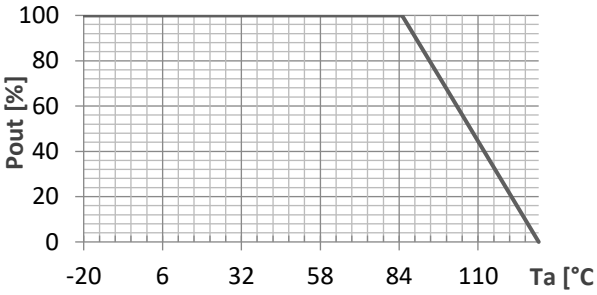

PHYSICAL PARAMETERS

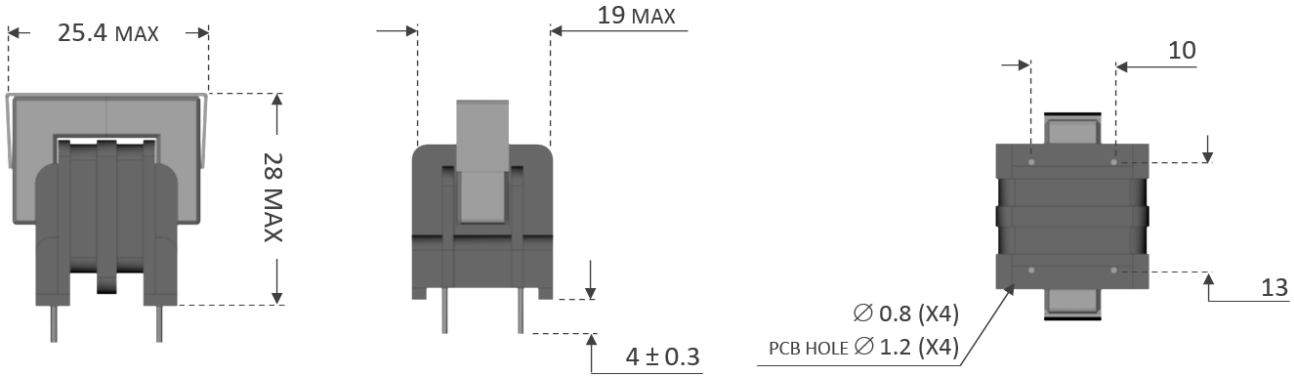

RoHS Compliant

Partners

We want to be at customers' disposal with our real added value: the **R&D department**, thanks to a technical cooperation with worldwide actors such as ST Microelectronics, Microchip and Silica Avnet is constantly stimulated to face new challenges.

Nowadays, even if the "core business" remains the electromagnetic components engineering and production, AQ Magnetica is now focused on being the engineering partner of our main customers in the design of switch mode power supplies and EMI.

Main customers

AQ Magnetica customers:

AQ Group customers:

Contacts

Technology & Market	-	Roberto Volpini	-	roberto.volpini@aqg.se
Quality	-	Marco Staffolani	-	marco.staffolani@aqg.se
Purchase office	-	Daniela Boresta	-	daniela.boresta@aqg.se
Production	-	Daniele Pellegrini	-	daniele.pellegrini@aqg.se
Documentation	-	Davide Bontempi	-	davide.bontempi@aqg.se

AQ Magnetica s.r.l. a socio unico

Via G. Marcora, 20
60022 Castelfidardo, (AN) - Italy

Tel: +39 071 78 23 855
Fax: +39 071 78 24 000
www.magnetica.eu

NOTE:

AQ Magnetica s.r.l.
via G. Marcora, 20
60022 Castelfidardo (AN)
Tel: +39 071 78 23 855
Fax: +39 071 78 24 000

www.magnetica.eu

WE ARE RELIABLE

NOTE: