Safety Pedal SP 110

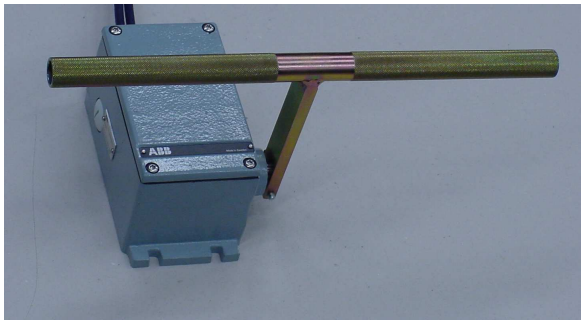

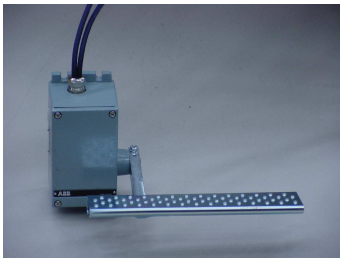

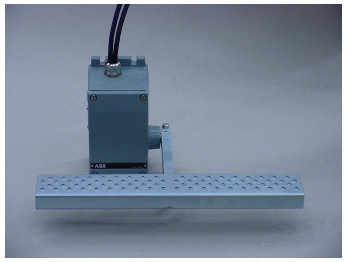

Features
- Wall mounting
- Dead Man function
- Emergency brake function
- Several pedals as option
- Electrical interface: Several options

Technical description
- Cast steel structure
- One limit switch

Technical data
- Weight: 5,5kg
- Digital outputs: 2 (NC) 2(NO)
- Switch rate: 400VAC 10A, 48VDC 5A
- IP65

Dimensions

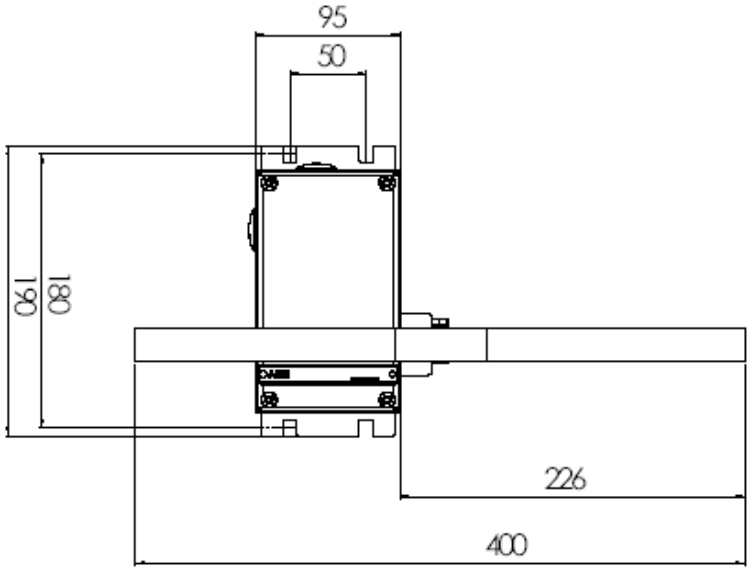

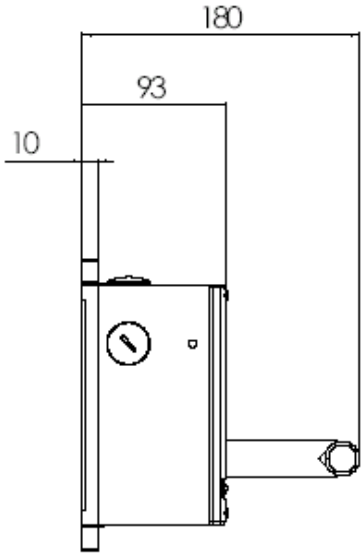

AQ Mekatronik AB

Phone: +46 278 322 50
www.aqg.se