Safety Pedal SP 130

Features
- Easy to adjust in height
- Wall mounting
- Emergency brake function
- Dead Man function
- Foot activated bell switch

Technical description
- Adjustment in height supported by a gas-spring
- Powder painted steel structure
- Carpet on the footrest
- Two limit switches for signalling

Technical data
- Weight: 35kg
- Digital outputs: 4 (NC)
- Electrical interface: AMP 16 pole mail connector
- Switch rate: 400VAC 2A IP 67
- Bell switch rate: 125-250VAC 20A IP 20

Dimensions

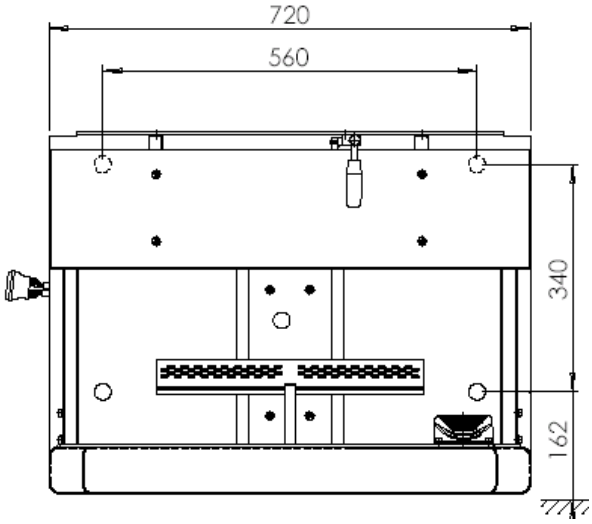

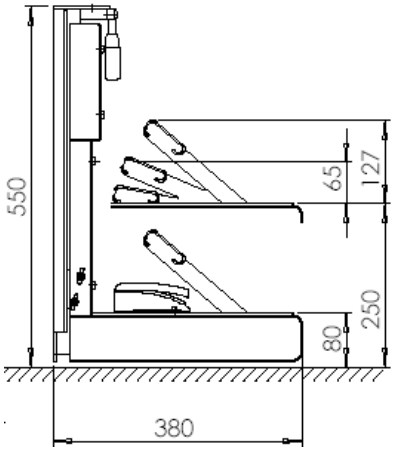

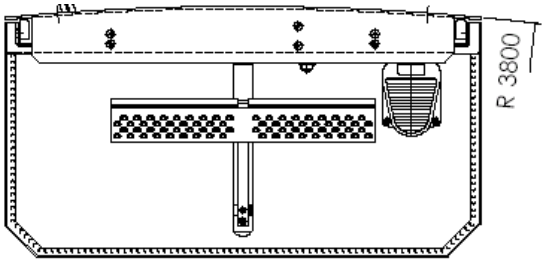

AQ Mekatronik AB

Phone: +46 278 322 50
www.aqg.se