Safety Pedal SP 140

Features
- Easy to adjust in height
- Wall mounting
- Emergency brake function
- Dead Man function
- Ventilation

Technical description
- Adjustment in height supported by a gas-spring
- Powder painted steel structure
- Carpet on the footrest

Technical data
- Weight: 35kg
- Digital outputs: 2 (NC) 2(NO)
- Electrical interface: Wago 5 pol male connector
- Switch rate: 400VAC 10A, 48VDC 5A
- IP65

Dimensions

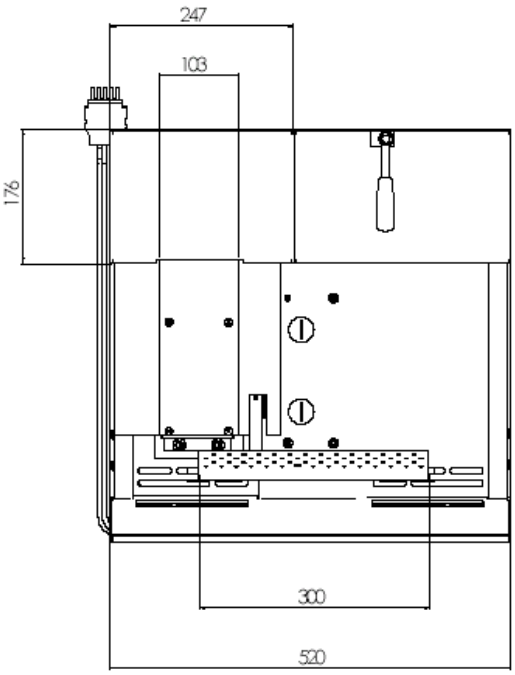

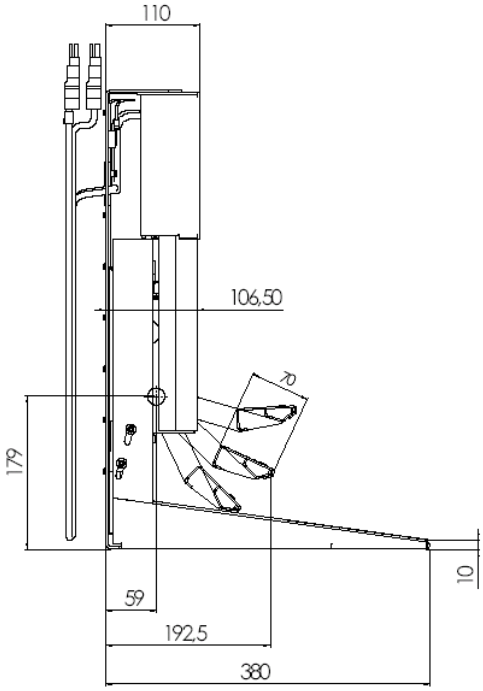

AQ Mekatronik AB

Phone: +46 278 322 50
www.aqg.se